SCHEMATIC DIAGRAM

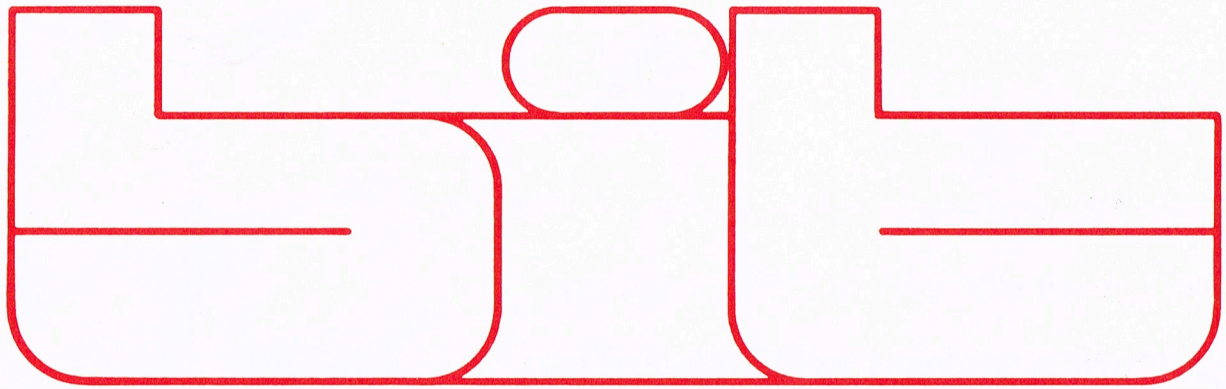

01

RACK EXPANDER

⊙-<	FEMALE CONNECTOR SYMBOL (es. J 2/1)
⊙→	PLUG IN CONNECTOR SYMBOL
○	WIRE SOLDERING POINT
□	TEST POINT (T P...)
•	CONNECTING POINT (ON p.c.b.)
▭•	METALLIC FILM RESISTOR 1%

ALL resistors 1/4 w unless otherwise indicated

ALL tabswitches shown in OFF position

ALL keyswitches shown in OFF position

See part list for component part numbers

BIT RESERVES THE RIGHT TO CHANGE
SPECIFICATIONS AND DESIGNS, WITHOUT
NOTICE AND LIABILITY.

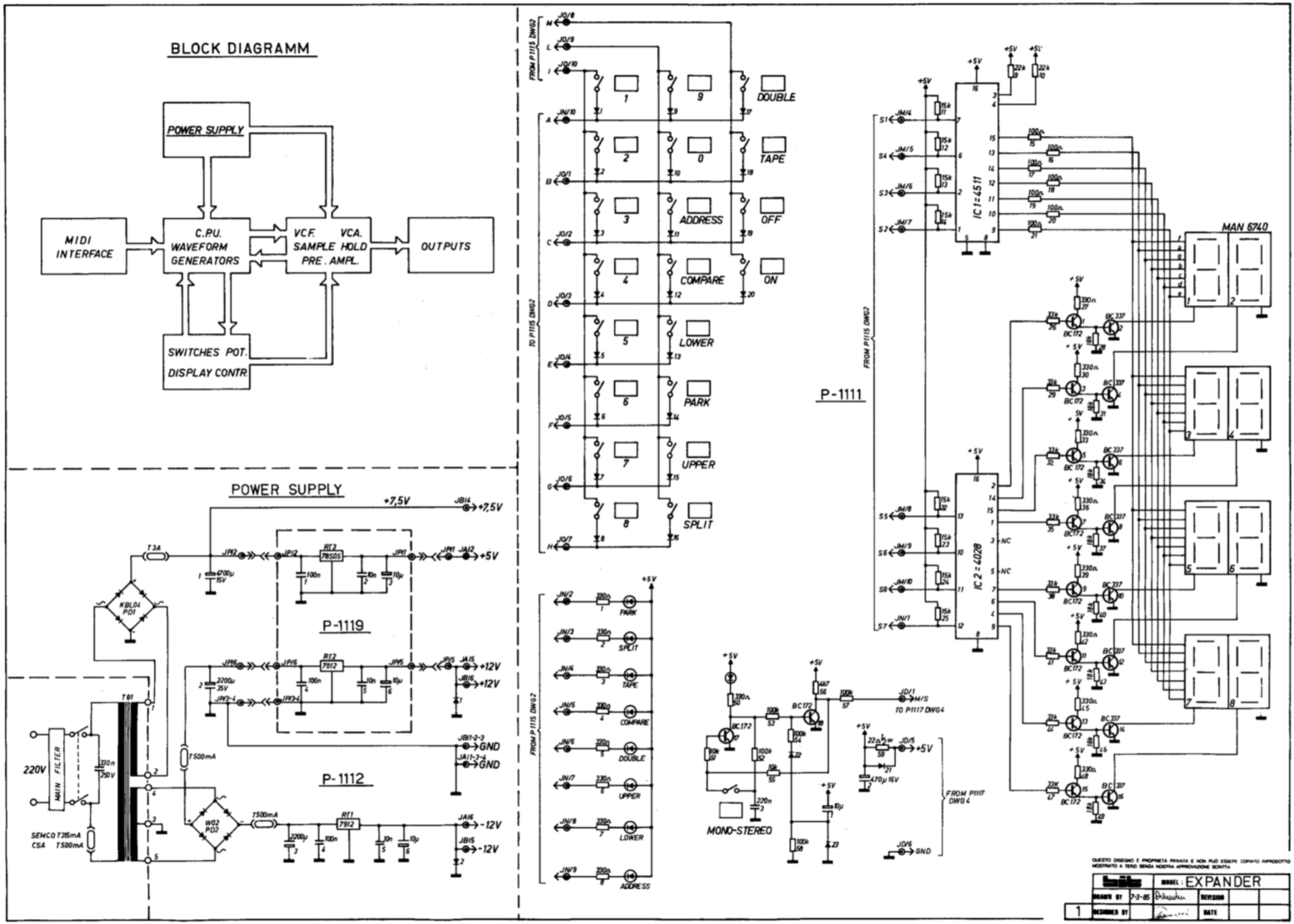
BLOCK DIAGRAMM
POWER SUPPLY
MIDI INTERFACE
C.P.U. WAVEFORM GENERATORS
VCF. VCA. SAMPLE HOLD PRE. AMPL.
OUTPUTS
SWITCHES POT. DISPLAY CONTR.
POWER SUPPLY
P-1119
P-1112
P-1111
MAIN FILTER
220V
SEMCO T315mA
CSA T500mA
KBL04 PD1
W02 PD2
RT1 7912
RT2 7812
RT3 78S05
T3A
T500mA
+7,5V
+5V
+12V
-12V
GND
FROM P1115 DWG2
TO P1115 DWG2
DOUBLE
TAPE
ADDRESS
OFF
COMPARE
ON
LOWER
PARK
UPPER
SPLIT
MONO-STEREO
TO P1117 DWG4
FROM P1117 DWG4
IC1=4511
IC2=4028
MAN 6740
BC172
BC337
NC
M/S
GND
QUESTO DISEGNO E PROPRIETA PRIVATA E NON PUO ESSERE COPIATO RIPRODOTTO MOSTRATO A TERZI SENZA NOSTRA APPROVAZIONE SCRITTA
MODEL: EXPANDER
DRAWN BY 7-3-85
REVISION
DESIGNED BY
DATE
1

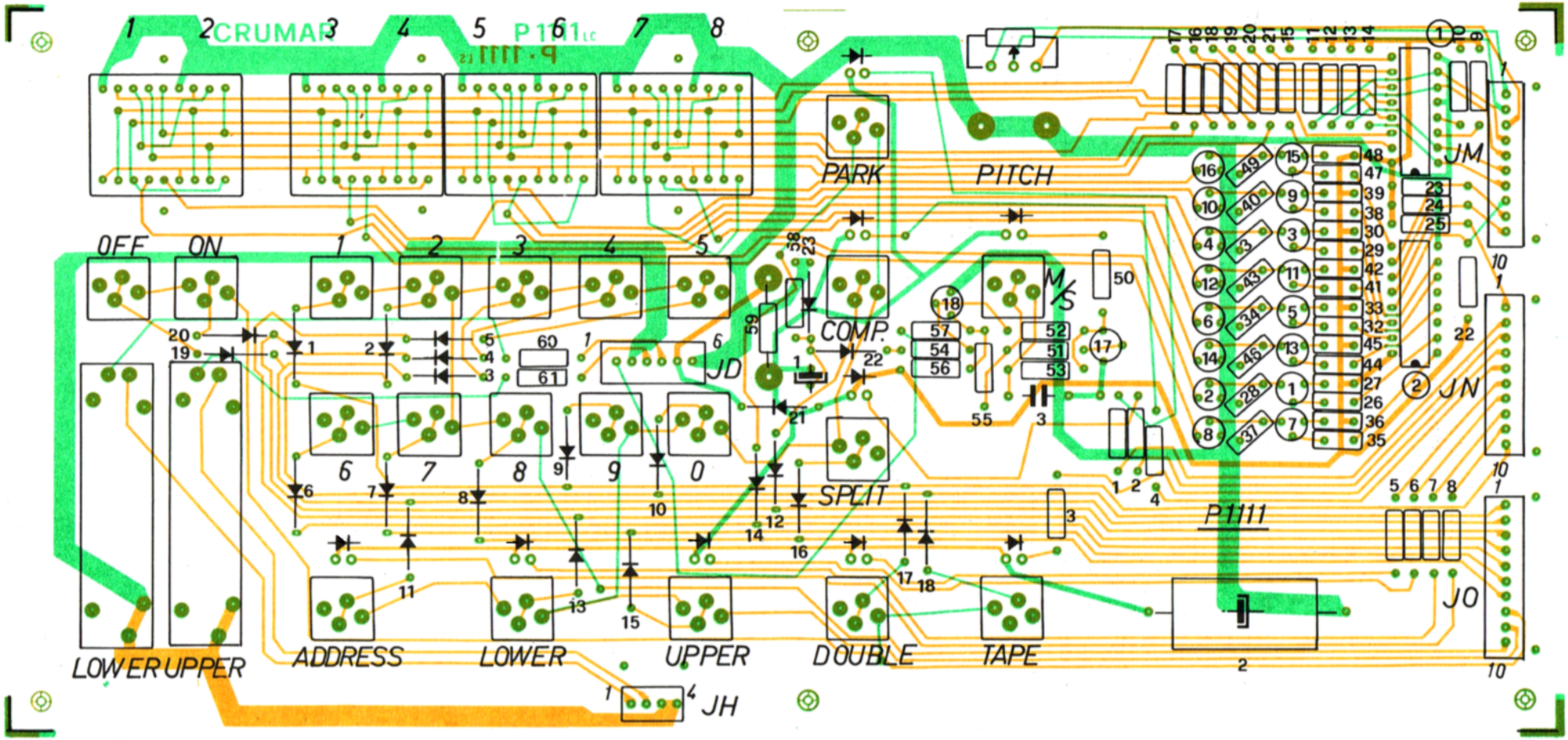

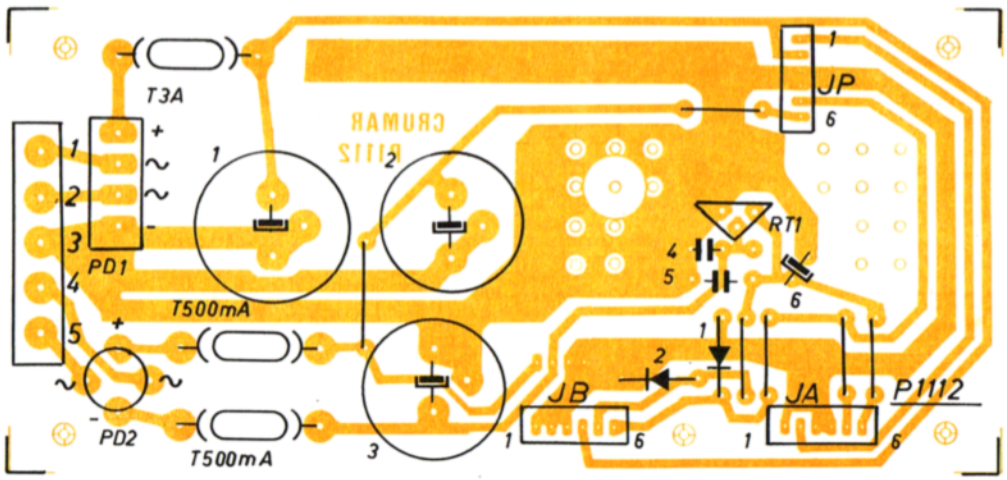

QUESTO DISEGNO È PROPRIETÀ PRIVATA E NON PUÒ ESSERE COPIATO RIPRODOTTO MOSTRATO A TERZI SENZA NOSTRA APPROVAZIONE SCRITTA

bit	MODEL: EXPANDER			
DRAWN BY	7-3-05		REVISION	
1A DESIGNED BY			DATE	

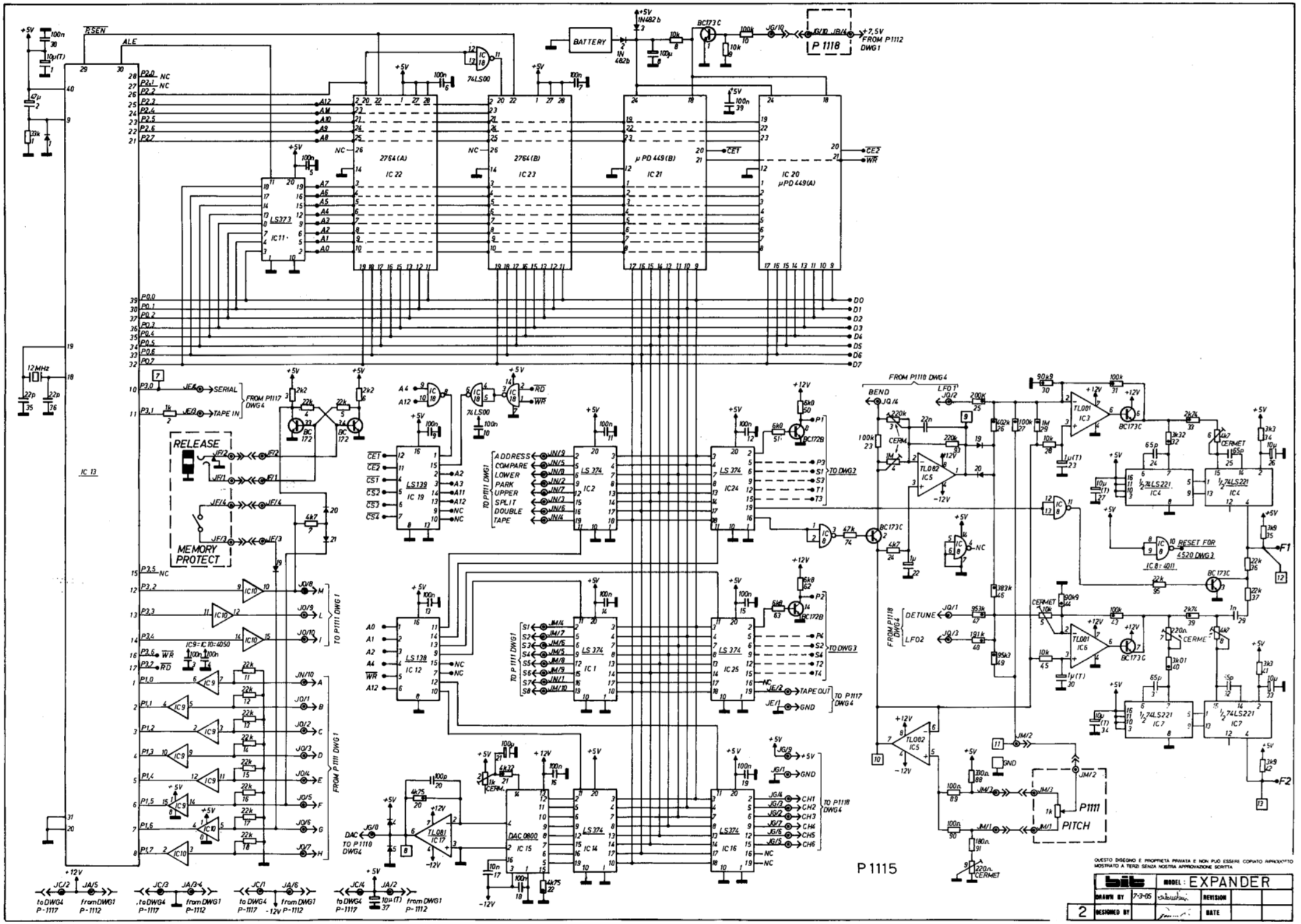

QUESTO DISEGNO È PROPRIETÀ PRIVATA E NON PUÒ ESSERE COPIATO RIPRODOTTO MOSTRATO A TERZI SENZA NOSTRA APPROVAZIONE SCRITTA

bit	MODEL: EXPANDER		
DRAWN BY	7-3-05	REVISION	
2 DESIGNED BY		DATE	

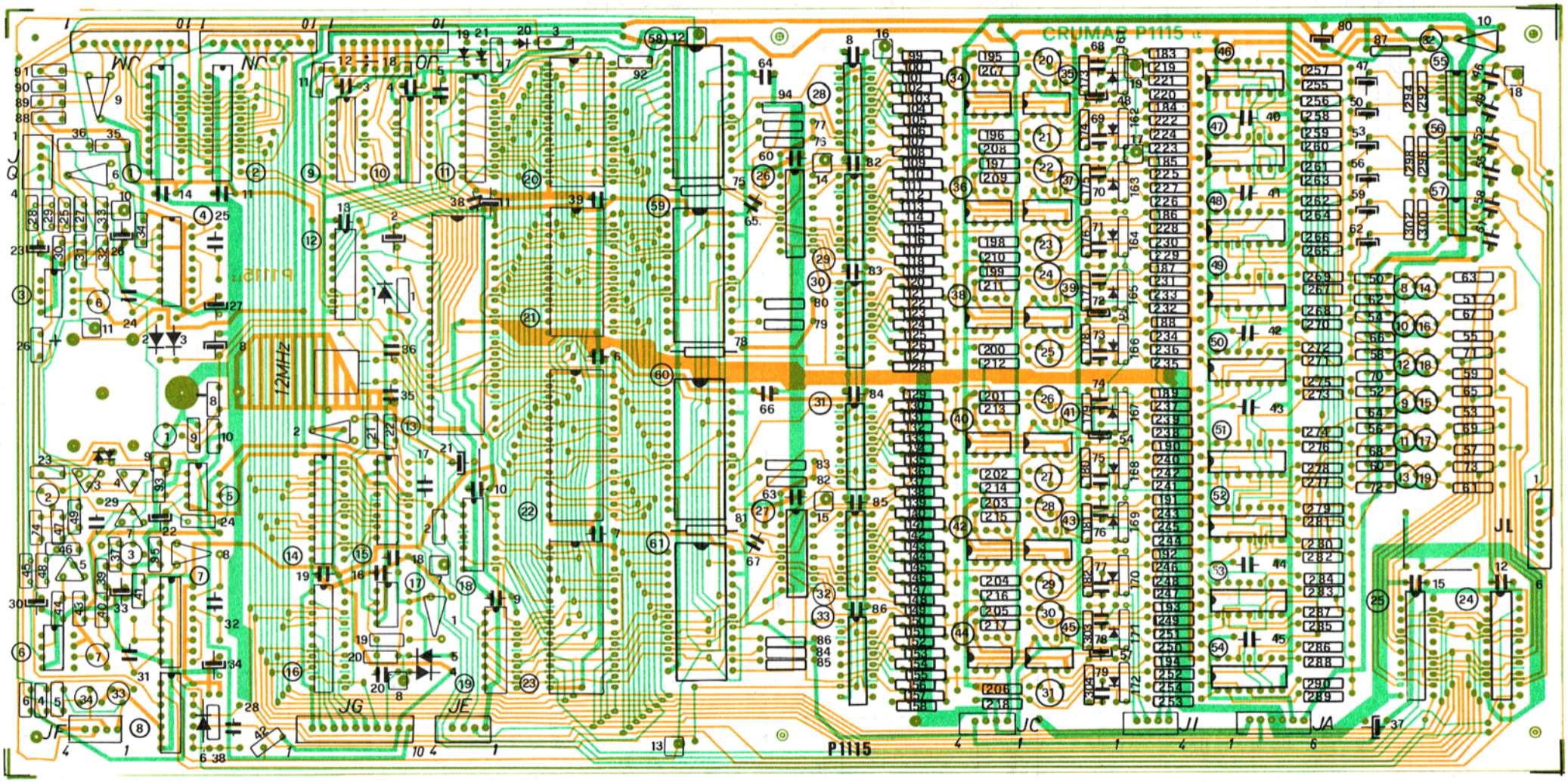

QUESTO DISEGNO È PROPRIETA PRIVATA E NON PUÒ ESSERE COPIATO RIPRODOTTO MOSTRATO A TERZI SENZA NOSTRA APPROVAZIONE SCRITTA

bit		MODEL: EXPANDER		
DRAWN BY	7-3-85		REVISION	
2A DESIGNED BY			DATE	

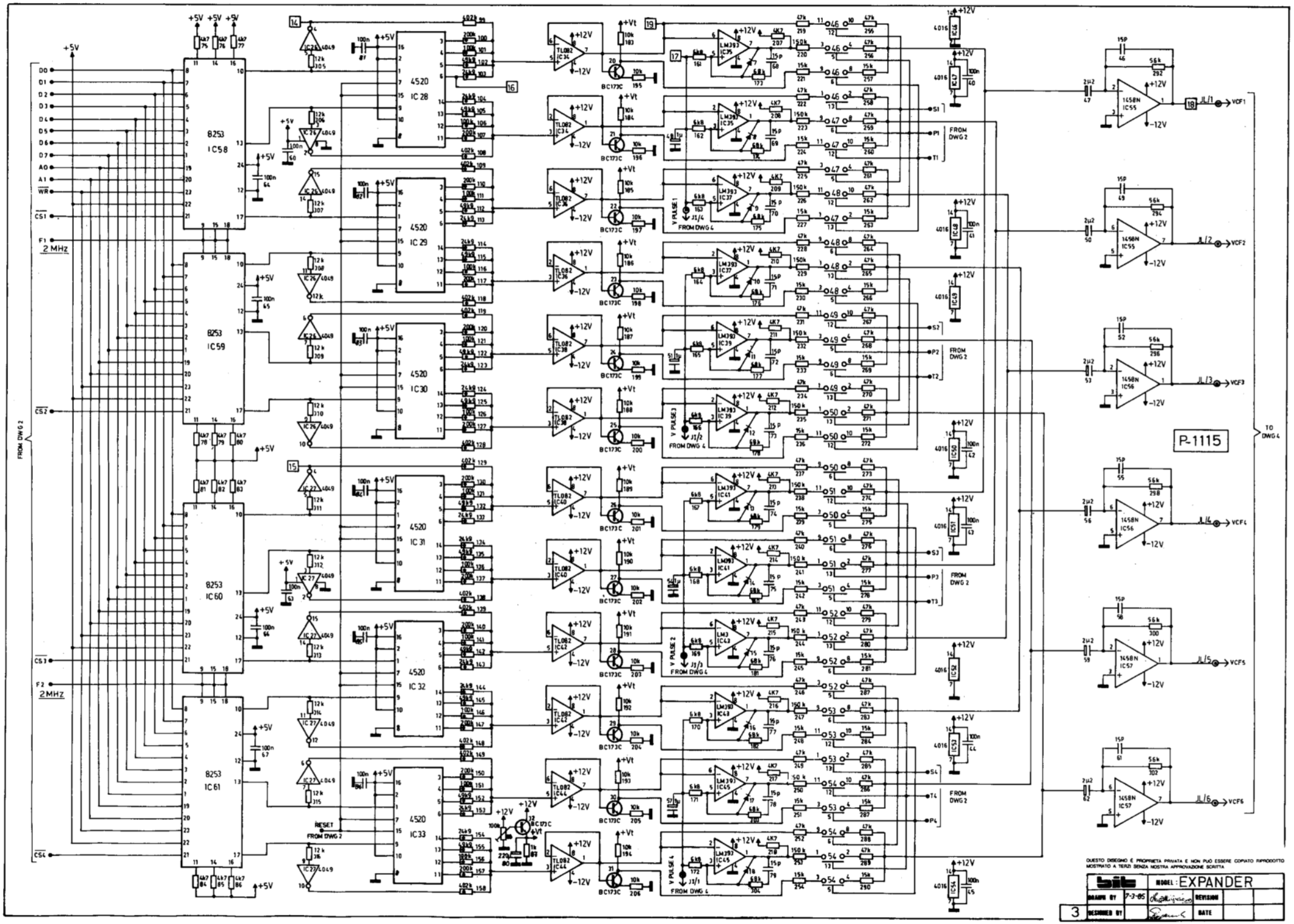
P-1115
MODEL: EXPANDER
DRAWN BY
DESIGNED BY
REVISION
DATE
QUESTO DISEGNO È PROPRIETÀ PRIVATA E NON PUÒ ESSERE COPIATO RIPRODOTTO MOSTRATO A TERZI SENZA NOSTRA APPROVAZIONE SCRITTA
8253 IC58
8253 IC59
8253 IC60
8253 IC61
4520 IC28
4520 IC29
4520 IC30
4520 IC31
4520 IC32
4520 IC33
2 MHz
FROM DWG 2
TO DWG 4
RESET FROM DWG 2

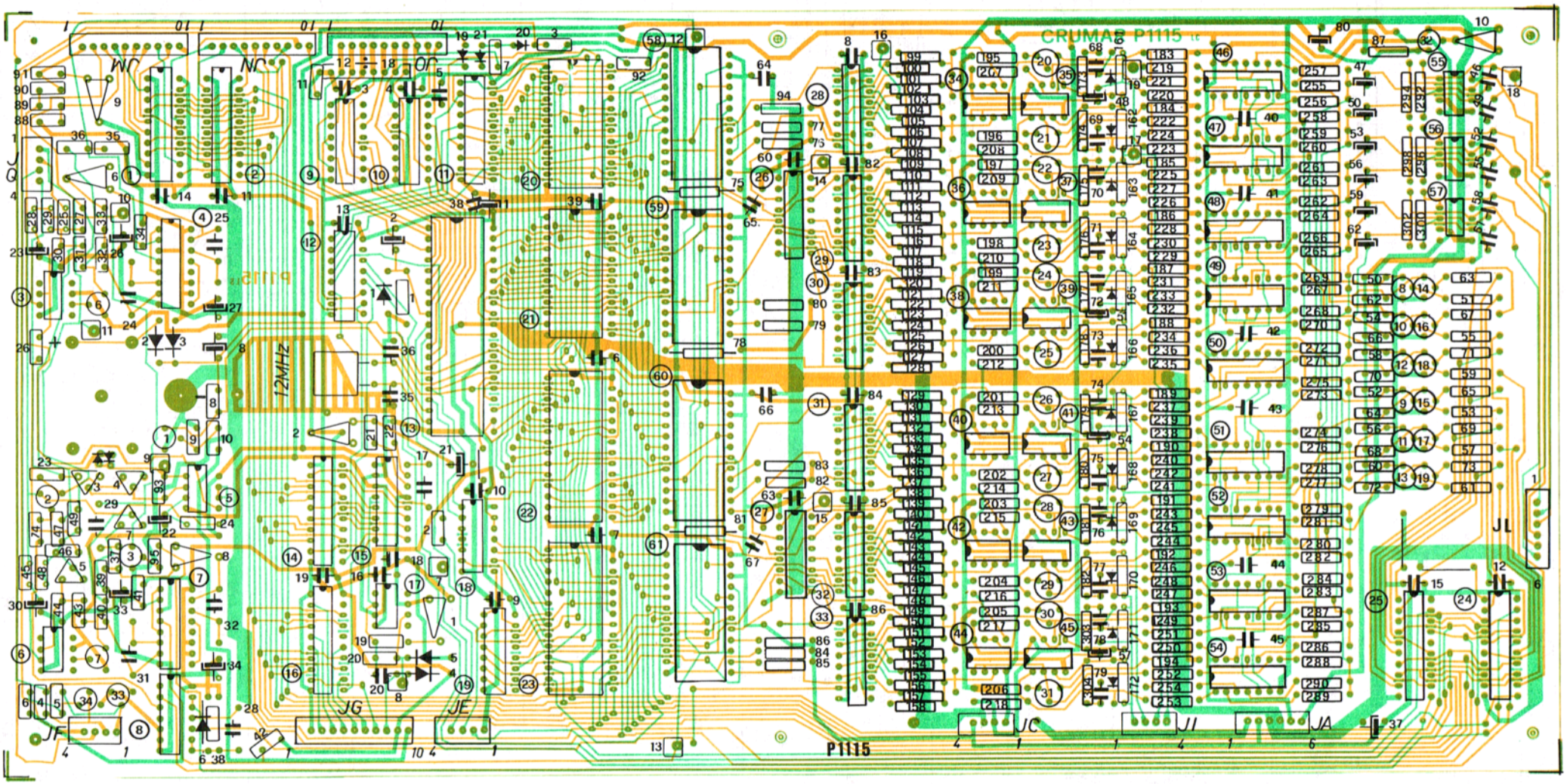

QUESTO DISEGNO E PROPRIETÀ PRIVATA E NON PUÒ ESSERE COPIATO RIPRODOTTO MOSTRATO A TERZI SENZA NOSTRA APPROVAZIONE SCRITTA

	bit	MODEL: EXPANDER		
	DRAWN BY	7-7-85	REVISION	
3A	DESIGNED BY		DATE	

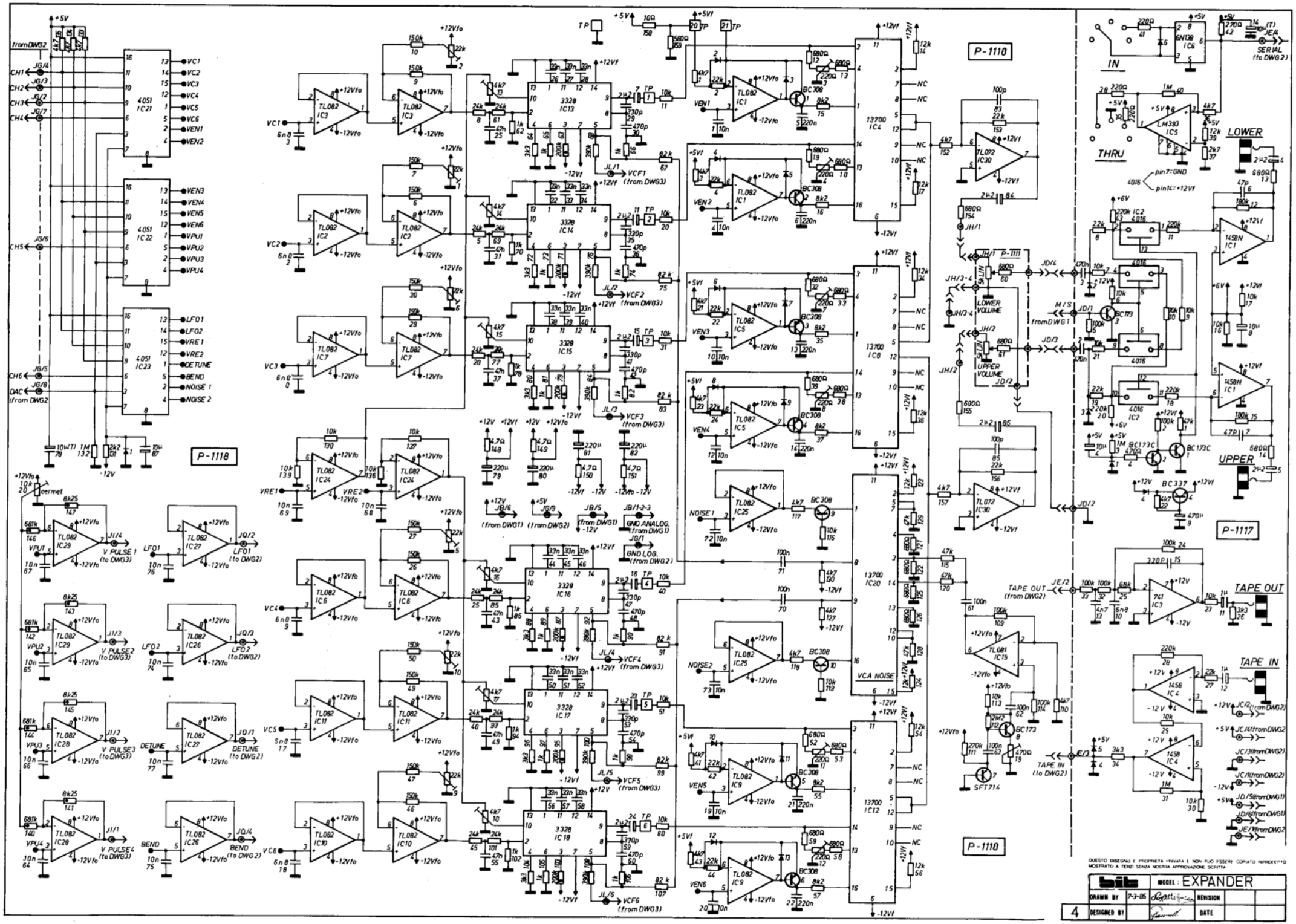
P-1118
P-1110
P-1111
P-1117
IN
THRU
LOWER
UPPER
TAPE OUT
TAPE IN
SERIAL (to DWG2)
LOWER VOLUME
UPPER VOLUME
VCA NOISE
GND ANALOG. (from DWG1)
GND LOG. (from DWG2)
V PULSE 1 (to DWG3)
V PULSE 2 (to DWG3)
V PULSE 3 (to DWG3)
V PULSE 4 (to DWG3)
LFO1 (to DWG2)
LFO2 (to DWG2)
DETUNE (to DWG2)
BEND (to DWG2)
TAPE OUT (from DWG2)
TAPE IN (to DWG2)
from DWG2
from DWG1
pin7=GND
pin14=+12Vf
QUESTO DISEGNO E PROPRIETA PRIVATA E NON PUO ESSERE COPIATO RIPRODOTTO MOSTRATO A TERZI SENZA NOSTRA APPROVAZIONE SCRITTA
bit
MODEL: EXPANDER
DRAWN BY 7-3-05
REVISION
DESIGNED BY
DATE
4

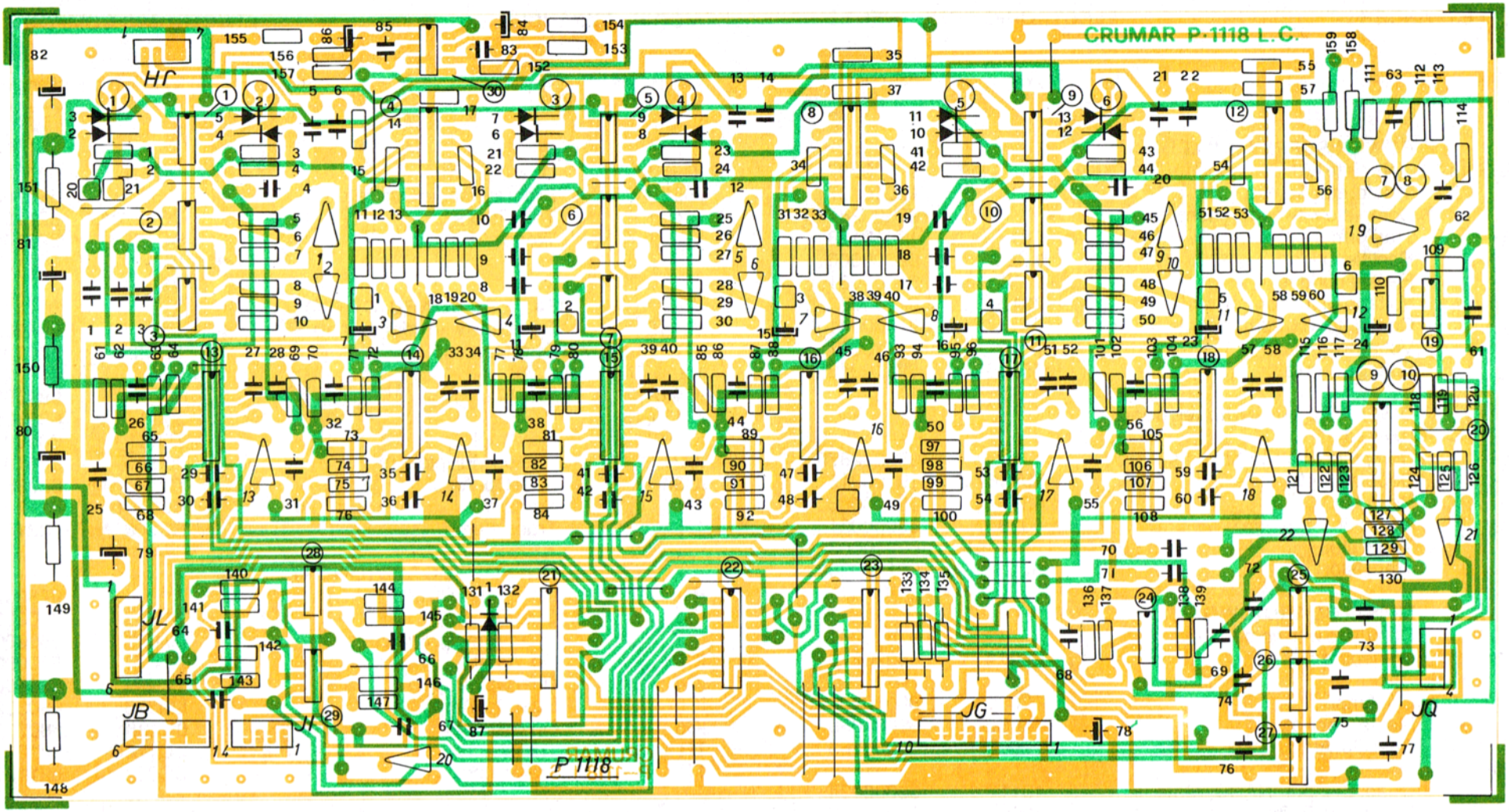

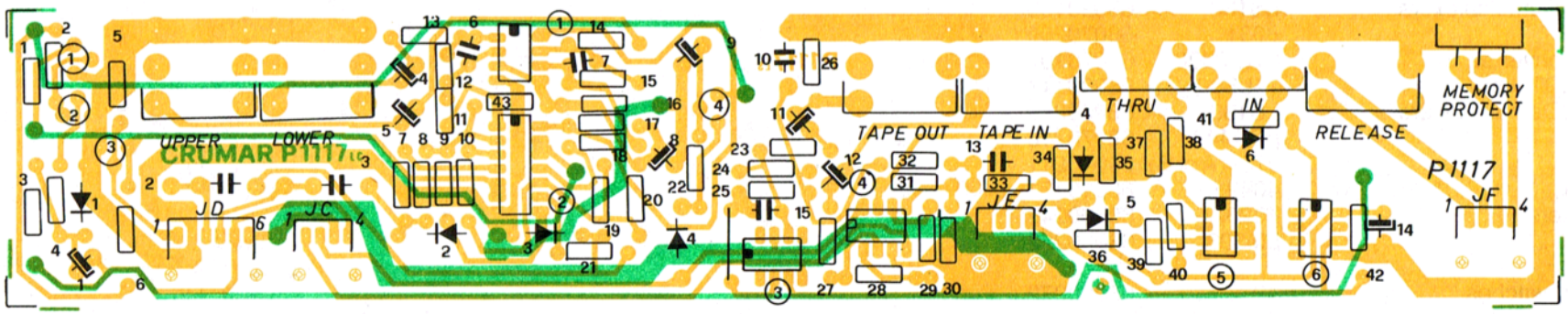

QUESTO DISEGNO È PROPRIETÀ PRIVATA E NON PUÒ ESSERE COPIATO RIPRODOTTO MOSTRATO A TERZI SENZA NOSTRA APPROVAZIONE SCRITTA

bit		MODEL: EXPANDER			
DRAWN BY	7-3-05		REVISION		
4A DESIGNED BY			DATE		

Schem. Ref.	Circuit	Type	Part Code
	POWER SUPPLY (DWG 1)		
P1112 (Semko)	Complete with components		978002871
	Trasformer Semko	T81	18010137
P1112 (C.S.A.)	Complete with components		978002879
	Trasformer C.S.A.	T81	18010138
PD1	Rectifier bridge	KBL04	66000006
PD2	Rectifier bridge	W02	66000001
RT1	Voltage regulator	7912	62110037
P1119	Complete with components		97800041
RT2	Voltage regulator	7812	62110027
RT3	Voltage regulator	75505	62110043
	DISPLAY'S and switches board (DWG 1)		
P1111	Complete with components		978002870
1÷8	Double Display	MAN6740	10120016
IC 1	Decoder	4511	68000086
IC 2	Decoder	4028	68000091
TR	Transistor	BC172B	62210003
TR	Transistor	BC337-40	62110038
	MICRO BOARD (DWG 2-3)		
P1115	Complete with components		978002874
IC1-2-14-16 24-25	Transparent latch	LS374	68020213
IC3-6-17	Op. Ampl.	TL081	68030205
IC4-7	Master oscillator	74LS221	68000058
IC5-34-36-38 40-42-44	Dual Op. Ampl.	TL082	68030163
IC8	Quad. 2 - input "NAND" Gate	4011	68000034
IC9-10	Non invert. Buffers.	4050	68000085
IC11	Transparent latch.	LS373	68020214
IC12	Decoders and Demultiplexers	LS138	68020153
IC13	Micro	8031	68070209
IC15	Dig. Analog. Converter	DAC0800	67070197
IC18	Positive "NAND" Gate	74LS00	68000117
IC19	Decoders and Demultiplexers	LS139	68020215
IC20-21	RAM	µPD449	68070216
IC22-23	Memory	2764(A or B)	68040211
IC26-27	Invert. Buffers	4049	68010131
IC28 ÷ 33	Dual up. counters.	4020	68000045
IC35-39-41-37 43-45	Dual Op. Ampl.	LM393	68030222
IC46 ÷ 54	Quad Analog. Switches	4016	68000072

MODEL: EXPANDER ELECTRONIC COMPONENT LIST

Schem. Ref.	Circuit	Type	Part Code
IC55-56-57	Dual Op. Ampl.	1458N	68000053
IC58 ÷ 61	Programmable Oscillator	8253	68070210
TR	Transistors	BC1273/C	62120003
TR	Transistors	BC172B	62210003
	FILTERS BOARD (DWG 4)		
P1119	Complete with components		978002877
IC1-2-3-5-6-7-9 10-11-24 ÷ 29	Dual Op. Ampl.	TL082	68030163
IC4-8-12-20	V.C.A.	13700	68030219
IC13÷18	V.C.F.	3328	68030223
IC19	Op. Ampl.	TL081	68000059
IC21-22-23	Analog Multiplexers	4051	68010154
IC30	Dual Op. Ampl.	TL072	68030140
TR	Transistors	BC173C	62120003
TR	Transistors	BC308	62210001
	OUTPUTS BOARD (DWG 4)		
P1117	Complete with components		978002876
IC1	Dual Op. Ampl.	1458	68000054
IC2	Quad Analog. Switches	4016	68000072
IC3	Op. Ampl.	741	68000059
IC4	Dual Op. Ampl.	1458N	68000053
IC5	Dual Op. Ampl.	LM393	68030222
IC6	Opto isolator	6N138	68070220
TR	Transistors	BC173C	62120003
TR	Transistors	BC337-40	62110038