Pianoelle

PS2500
GPS2500

PS2500
GPS2500

SERVICE MANUAL

Schematic Diagrams

GENERALMUSIC

CODE : 270189

GENERALMUSIC

Index & Warnings

GENERALMUSIC S.p.A. Sales Division: 47048 S.Giovanni in Marignano (RN) ITALY - Via delle Rose, 12 - tel. 0541/959511 - tlx 550555 GMUSIC I - fax 0541/957404

Notice

Service must be carried out by qualified personnel only. Any tampering carried out by unqualified personnel during the guarantee period will forfeit the right to guarantee.
For a correct operation of the instrument, after having switched off, be careful to wait at least 3 seconds before switching on again.
To improve the device's specifications, the schematic diagrams may be subject to change without prior notice.

Schematic Notes

⚠ All components marked by this symbol have special safety characteristics, when replacing any of these components use only manufacturer's specified parts.
The (µ) micro symbol of capacitance value is substituted by U. The (Ω) omega symbol of resistance value is substituted by E.
The electrolytic capacitors are 25Vdc rated voltage unless otherwise specified. All resistors are 1/8W unless otherwise specified.
All switches shown in the "OFF" position. All DC voltages measured to ground with a voltmeter 20KOhm/V.

- Soldering point.
- Male connector.
- Female connector.
- M/F faston connector.
- Test point.
- Supply voltage.
- Logic supply ground.
- Analog supply ground.
- Signal ground.
- Chassis ground.
- Flag joined with one or more flags with the same signal name inscribed.

ATTENTION
Observe precautions when handling electrostatic sensitive devices

PS2500 - To Open the Instrument

Disconnect the instrument from the mains.
Unscrew the four screws at the rear of instrument.
Remove the top panel in the direction as shown.

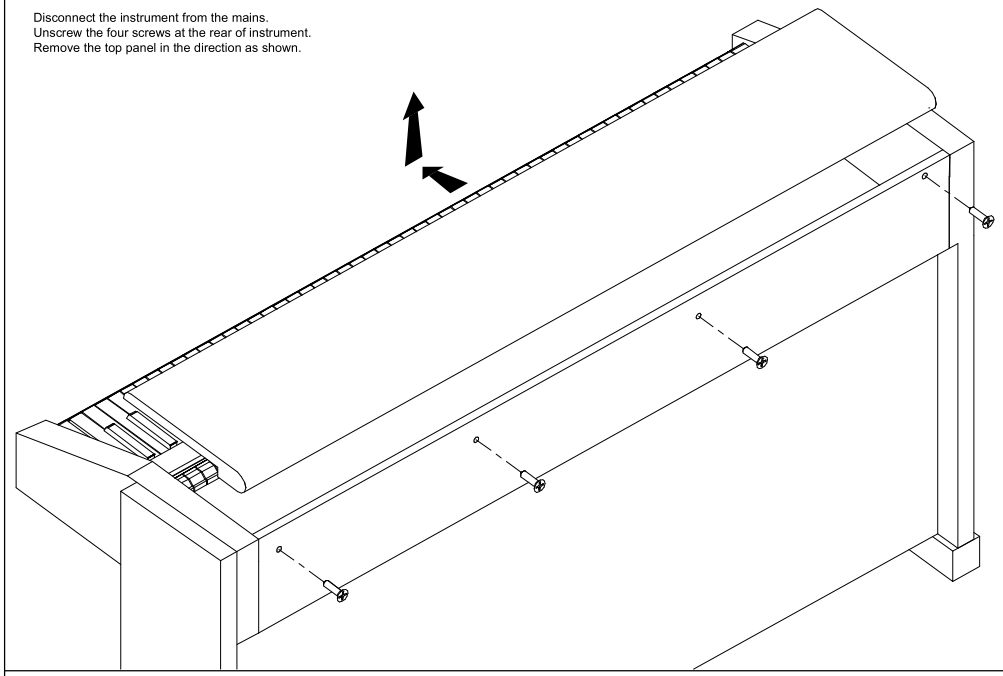

Remove the two locking plates (A) from the sides.
Remove the keyboard cover (slide it through the lateral guides).
To unlock the controls panel unscrew the three screws (B).

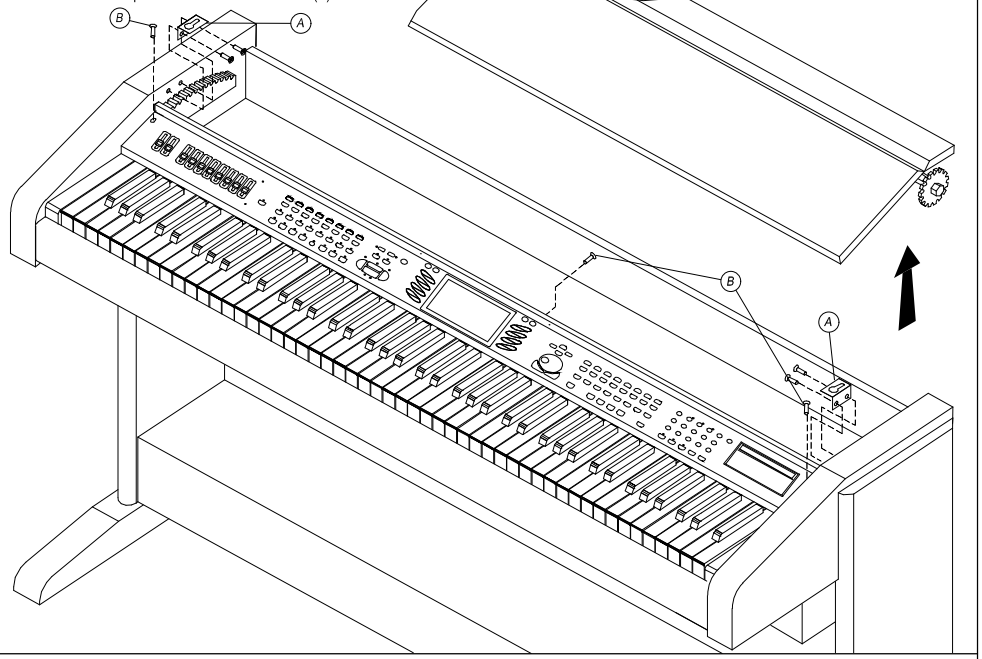

To remove the TP20 keyboard unscrew 11 screws (C) under the piano.
To remove the TP10 keyboard unscrew 8 screws (D) under the piano.

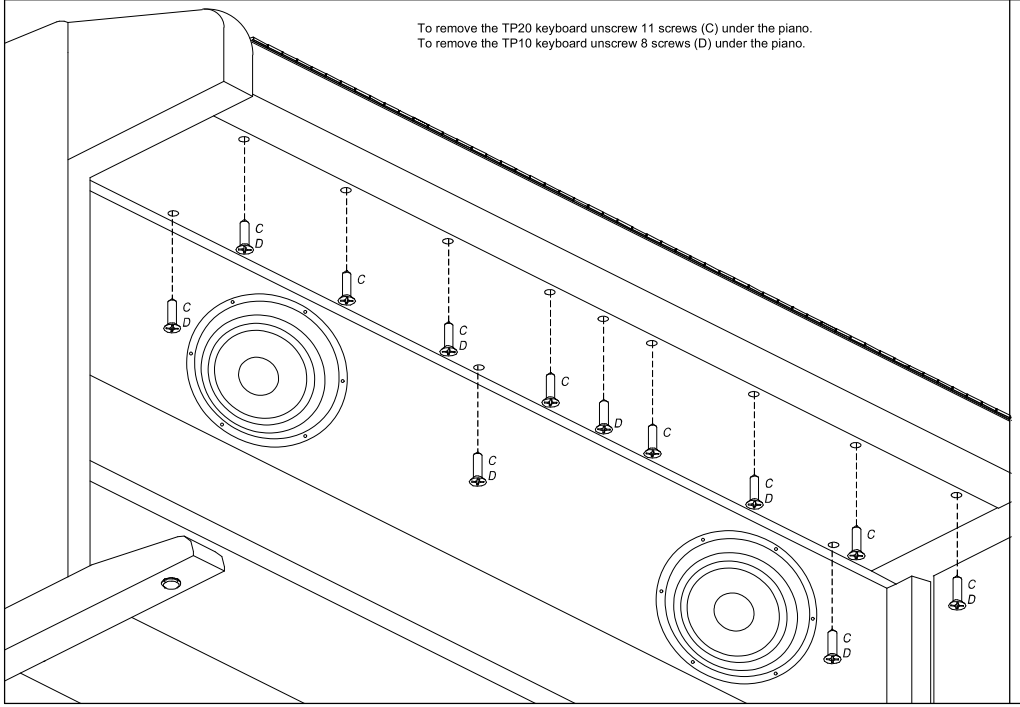

To remove a key insert a screwdriver or other similar object in the split at the key back, apply a light pressure and push in the direction shown.
NOTE: Before you remove a natural key you must remove the keyboard, if you remove a sharp key this operation is not necessary.

TP20

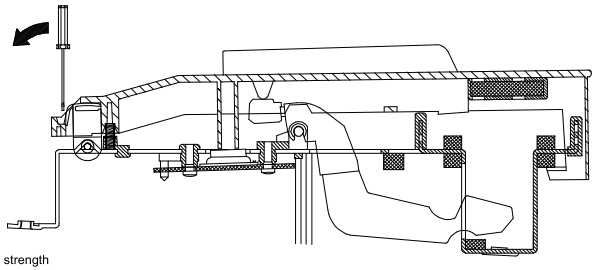

① Remove the key return spring.
②③④ Unlock the key appling not much strength
NOTE: To remove a sharp key before you must remove the near natural keys.

TP10

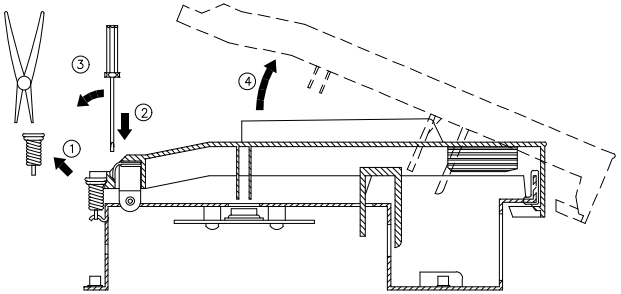

DRW Boccato	DWG# 550115	PC3S#	GENERALMUSIC S.p.A. ITALY
CKD Ricobelli	DISK 42 PART. 1/1	PS2500 Opening Instructions & Keyboard Disassembling	ALL RIGHTS ARE RESERVED. NO COPIES OR REPRODUCE THIS DOCUMENT WITHOUT WRITTEN CONSENT BY GENERALMUSIC.
APP. Consorte	REV: 19/12/96		

GPS2500 - To Open the Instrument

Disconnect the instrument from the mains. Lift the cover and unscrew the three screws (A).
Remove the protection panel by lifting it from the rear (B). Unscrew the two lateral screws (C).
Lift up the front panel with the keyboard cover raised.
Note: to operate without difficulty two people are required.

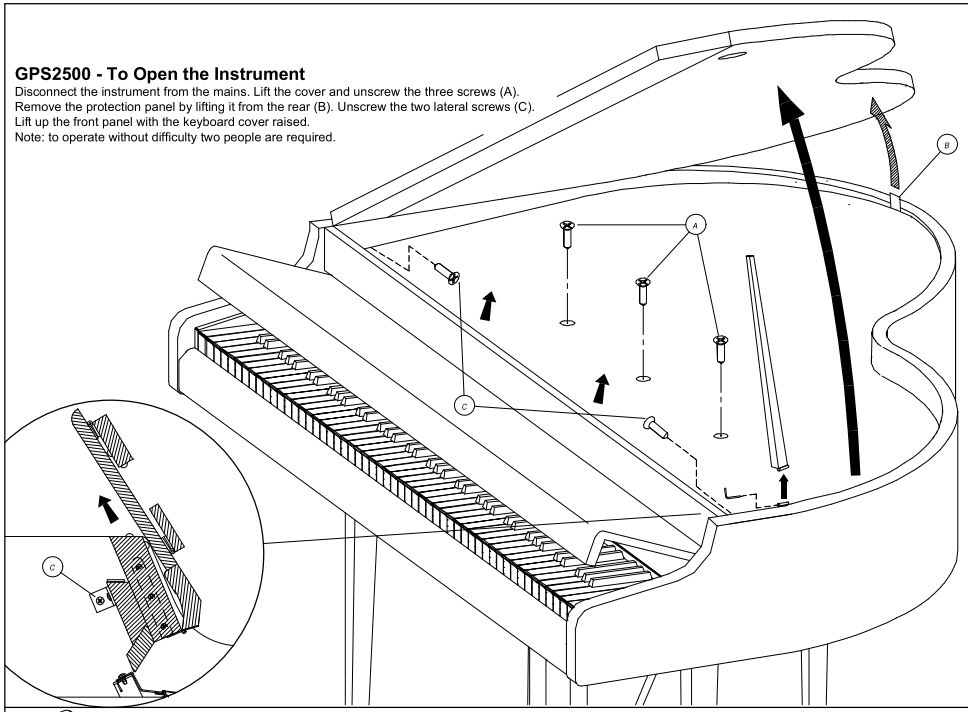

To easy access to the internal circuitry, you must remove the controls panel.
Unscrew the three screws (A), disconnect the three grounding jumpers (B),
pull the controls panel toward you and raise it.
To install the optional accessories it is not necessary to disconnect other
jumpers of the controls panel, rest the panel temporarily on the keyboard.
To re-assemble the piano follow the instructions in reverse order.

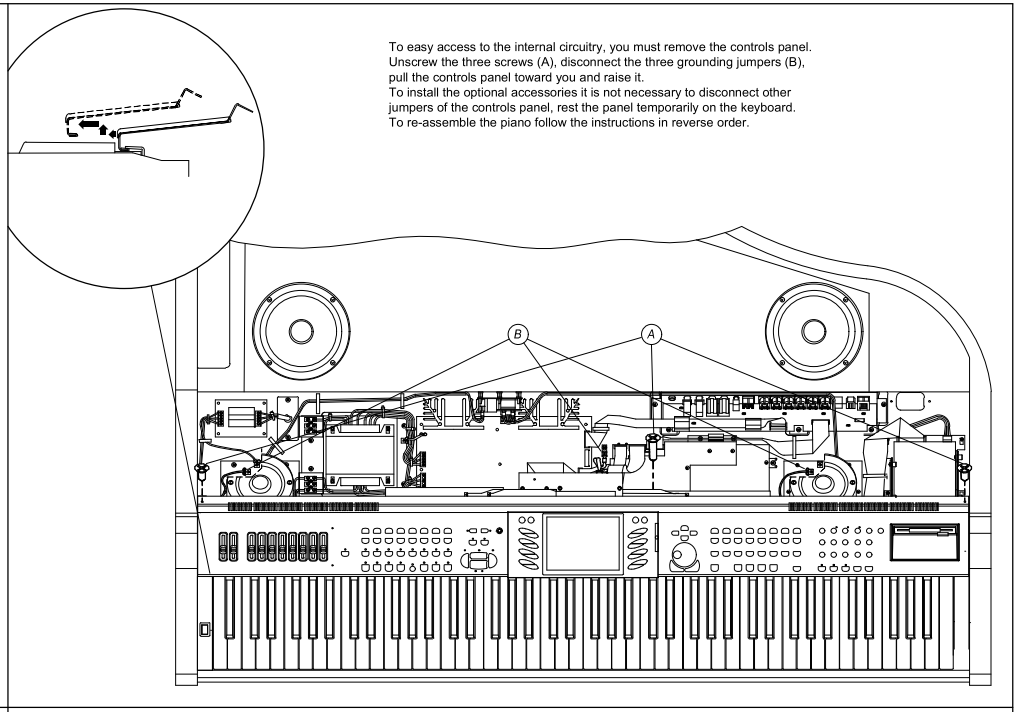

To remove the TP20 keyboard unscrew 11 screws (C) under the piano.
To remove the TP10 keyboard unscrew 8 screws (D) under the piano.

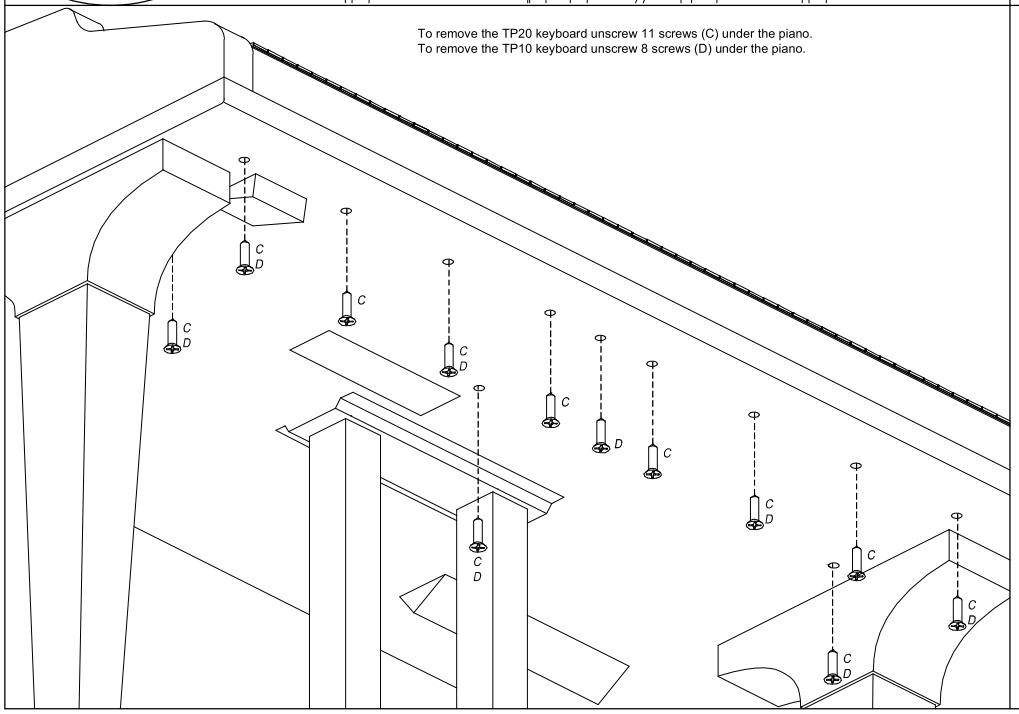

To remove a key insert a screwdriver or other similar object in the split at the key back, apply a light pressure and push in the direction shown.
NOTE: Before you remove a natural key you must remove the keyboard, if you remove a sharp key this operation is not necessary.

TP20

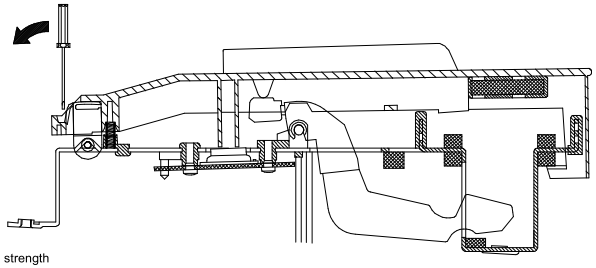

① Remove the key return spring.
②③④ Unlock the key appling not much strength
NOTE: To remove a sharp key before you must remove the near natural keys.

TP10

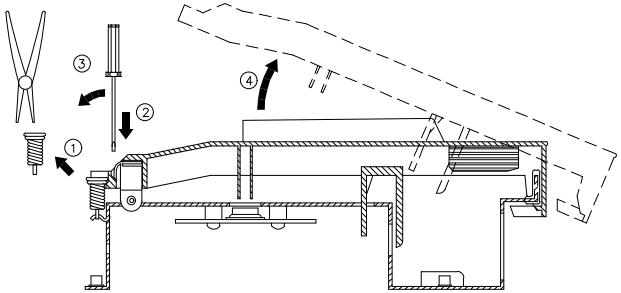

DRW Boccato	DWG# 550116	PCB#	GENERALMUSIC S.p.A. ITALY
CKD Riccobelli	DISK: 42 PART: 1/1	GPS2500 Opening Instructions & Keyboard Disassembling	ALL RIGHTS ARE RESERVED. NO COPIES OR REPRODUCE THIS DOCUMENT WITHOUT WRITTEN CONSENT BY GENERALMUSIC.
APP. Consorte	REV: 20/12/96		

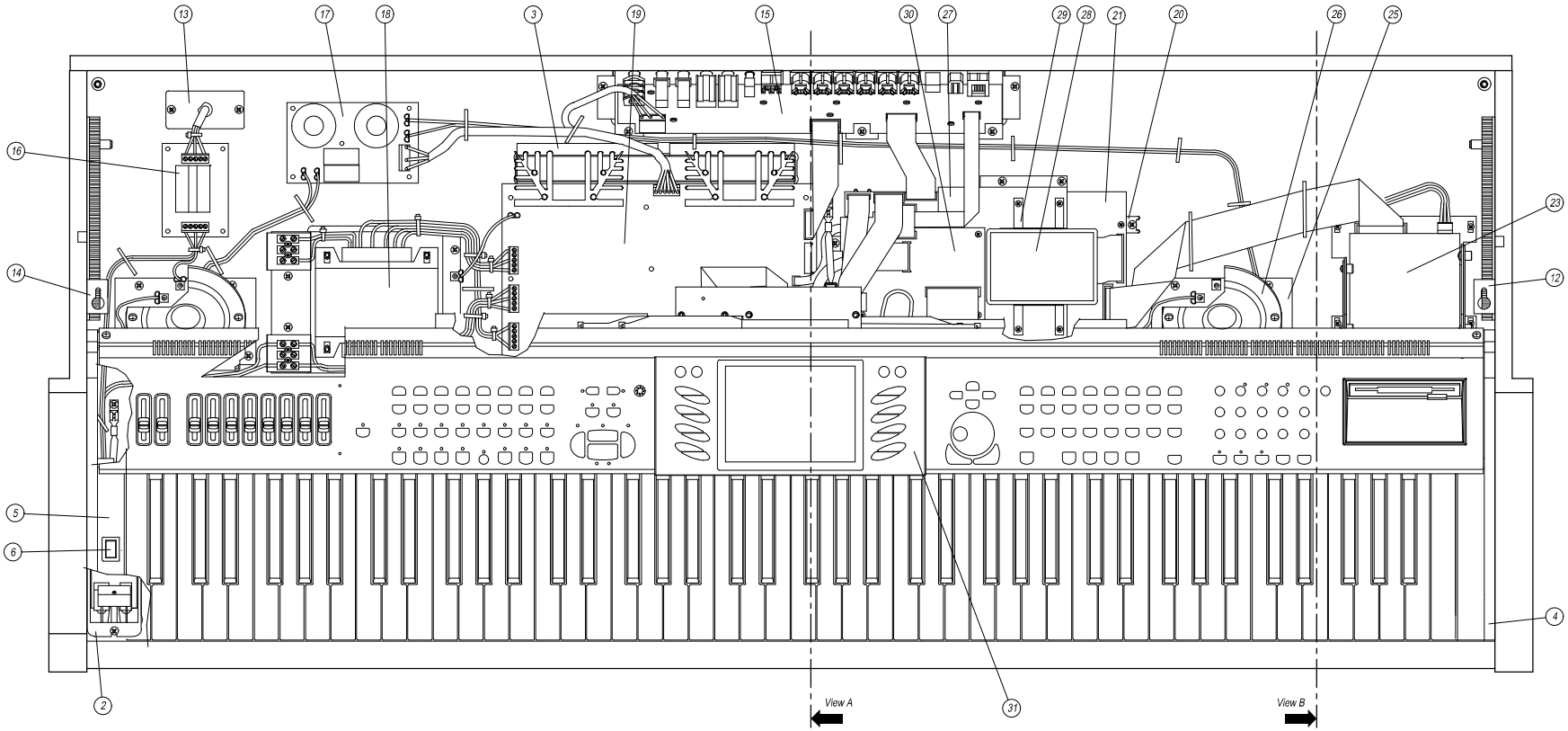

Ref.	Description
31	CONTROLS PANEL (see next page)
30	AUDIO/VIDEO INTERFACE BOARD
29	HARD DISK BRACKET
28	HARD DISK
27	AUDIO/VIDEO INTERFACE BOARD & H. D. SUPPORT
26	TWEETER
25	TWEETER SUPPORT
24	DISK DRIVE GROUP SUPPORT
23	3.5" DISK DRIVE
22	DISK DRIVE SUPPORT
21	CPU & SOUND GENERATOR BOARD
20	CPU & SOUND GENERATOR BOARD SUPPORT
19	POWER AMPLIFIER & SUPPLY BOARD
18	TRANSFORMER ASSEMBLY
17	CROSSOVER BOARD
16	MAINS FILTER BOARD
15	CONTROLS & MIDI I/O BOARD
14	LEFT COVER CLAMP
13	MAINS ASSEMBLY
12	RIGHT COVER CLAMP
11	CONTROL PANEL FRONT SUPPORT
10	CONTROL PANEL REAR SUPPORT
9	KEYBOARD ASSEMBLY (TP20 OR TP16)
8	KEYBOARD SLOPE SUPPORT
7	RACK
6	MAINS SWITCH
5	LEFT PANEL SUPPORT
4	RIGHT PANEL SUPPORT
3	HEATSINK GRID
2	PHONES BOARD
1	CABINET

View A

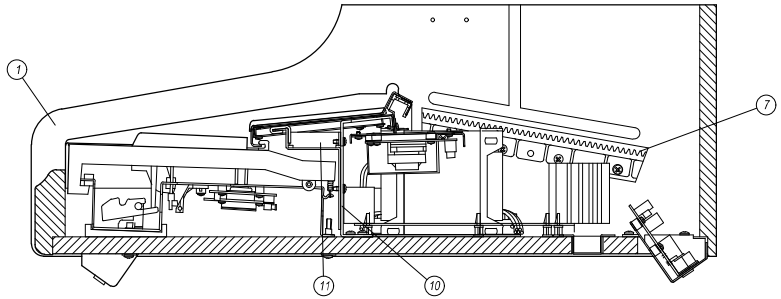

View B

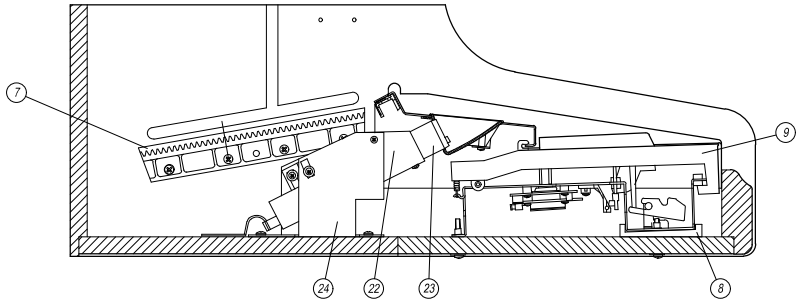

DRW PALANGHI	DWG# 550117	PCB#	GENERALMUSIC S.p.A. ITALY
CKD BOCCATO	DISK: 42 PART: 1/1	PS2500 CABINET ASSEMBLY	
APP. FALCONI	REV: 17-12-96		

Ref.	Description
32	COVER
31	KEYBOARD COVER
30	CABINET
29	SPEAKER BOX
28	LEFT SIDE LEG
27	RIGHT SIDE LEG
26	MUSIC STAND
25	PEDAL CROSS-BAR
24	TRIPLE PEDAL ASSEMBLY
23	AC-DC ADAPTER SCREEN
22	CONTROL PANEL INTERFACE BOARD
21	BOARDS SUPPORT
20	DIAL KNOB
19	SLIDER POTENTIOMETER KNOB
18	SLIDER POTENTIOMETER FRAME
17	RED FELT (1230x12x1.5)
16	RIGHT CONTROLS PANEL BOARD
15	LEFT CONTROLS PANEL BOARD
14	SLIDERS BOARD
13	<STYLE GROUP> RUBBER KEY-PAD
12	<START/STOP> RUBBER KEY-PAD
11	<SOUND GROUP> RUBBER KEY-PAD
10	<EDIT> RUBBER KEY-PAD
9	DISPLAY LEFT RUBBER KEY-PAD
8	DISPLAY RIGHT RUBBER KEY-PAD
7	DISPLAY GLASS
6	DISPLAY FRAME
5	LCD DISPLAY ASSEMBLY
4	DISPLAY SUPPORT
3	DISK-DRIVE FRAME
2	CLOTH FOR PANEL SLITS
1	CONTROL PANEL

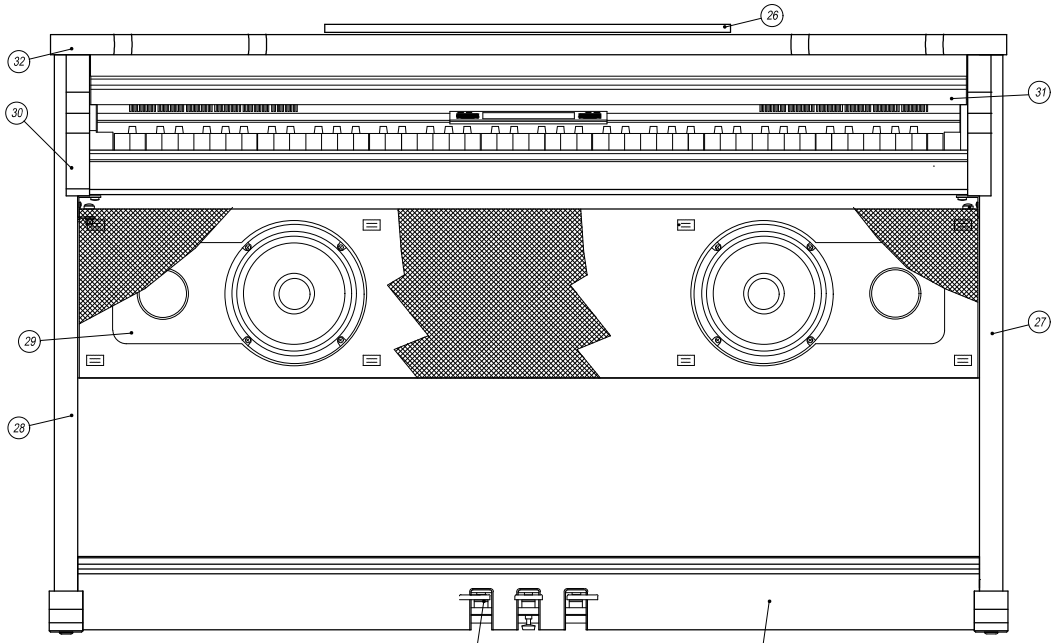

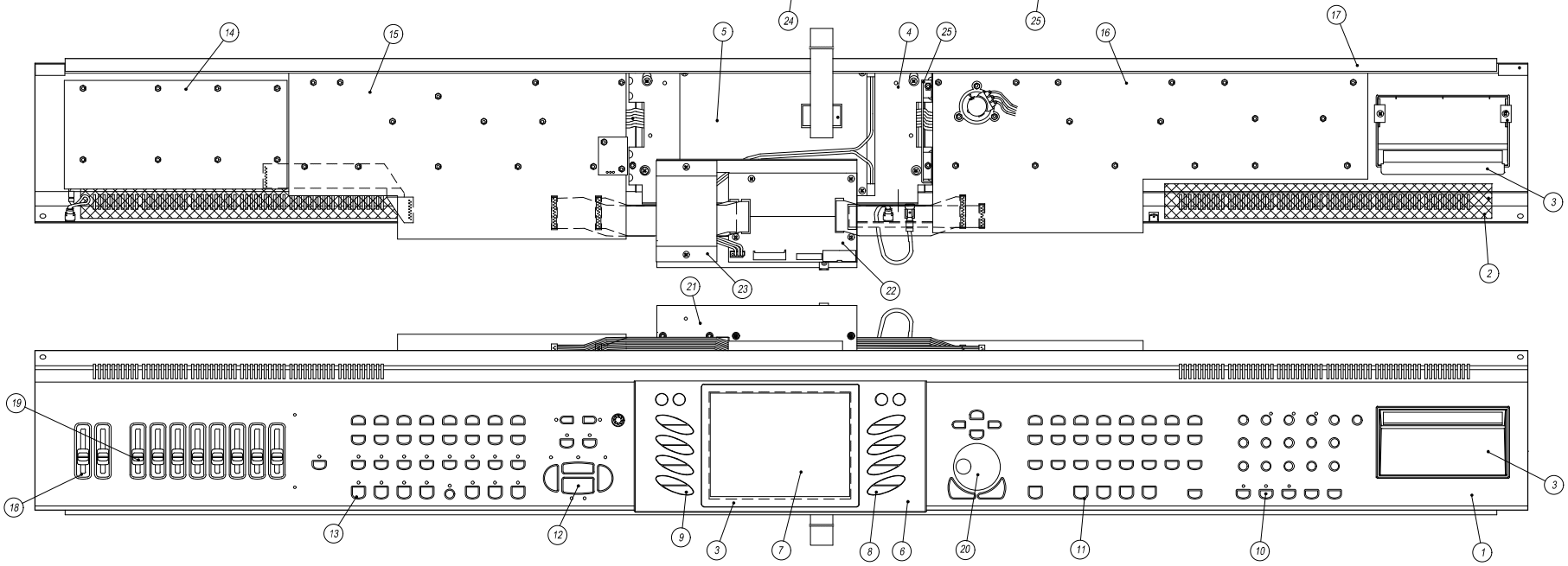

DRW Palanghi	DWG# 550118	PCB#	GENERALMUSIC S.p.A. ITALY
CKD Boccato	DISK: 42 PART: 1/1	STAND & CONTROLS PANEL ASSEMBLY	
APP. Falconi	REV: 18-12-96		

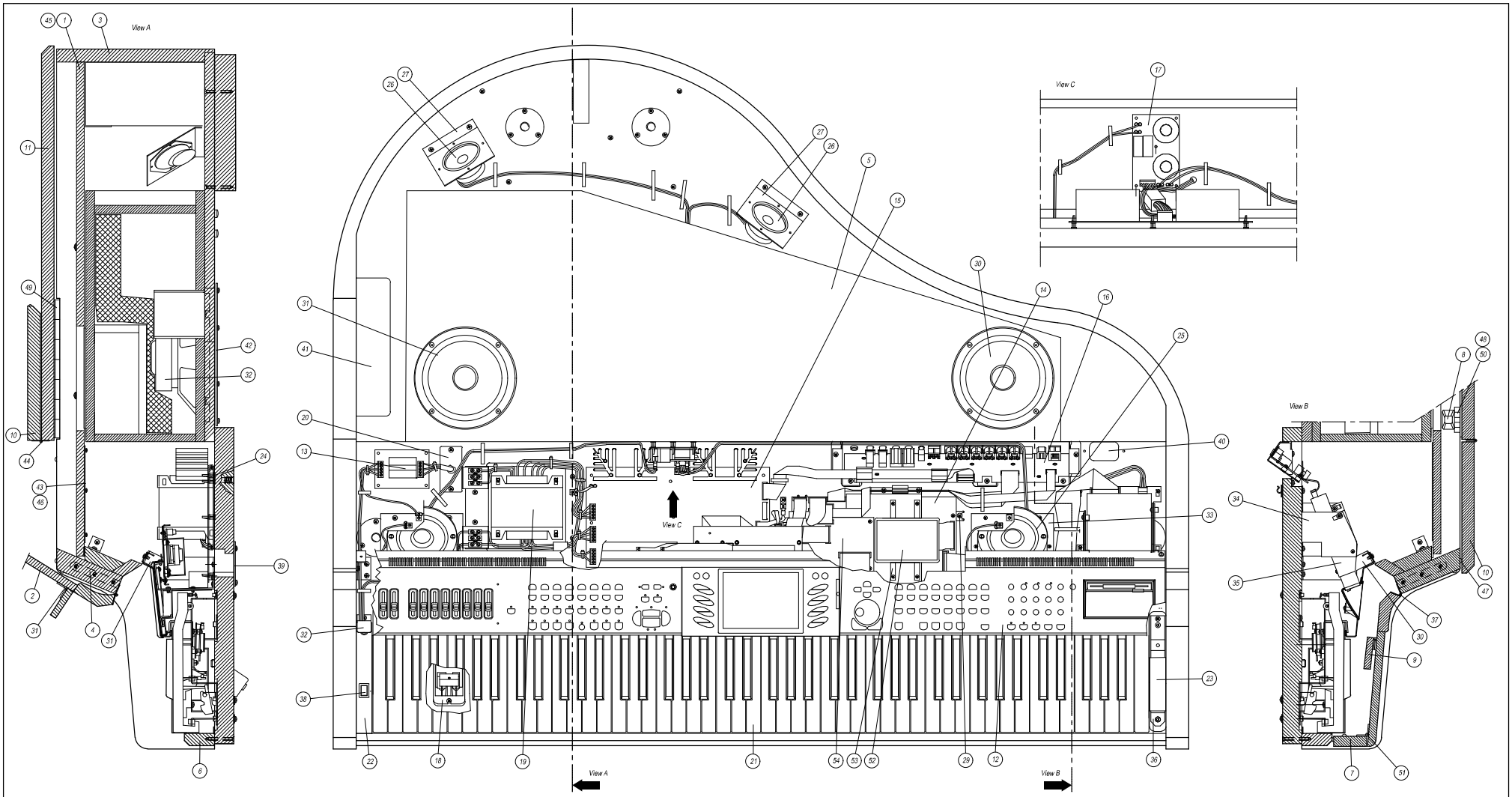

Ref.	Description
18	Phones Assembly
17	Cross-Over Board
16	Controls & Midi I/O Board
15	Power Amplifier & Supply Board
14	Cpu & Sound Generator Board
13	Mains Filter Board
12	Control Panel Assembly
11	Cover
10	Revolving Cover
9	Music Stand
8	Cover Stand
7	Revolving Keyboard Cover
6	Front Cross Bar
5	Speaker Box
4	Front Panel
3	Cabinet Chassis
2	Keyboard Cover
1	Speaker Panel

Ref.	Description
36	Cheek Support
35	Disk Drive Support
34	Drive Support Stand
33	Tweeter Support
32	8" Woofer
31	Hinge For Music Stand
30	6" Woofer
29	Cpu Board Support
28	Accessories Support
27	Tweeter Support
26	Cone Tweeter Speaker
25	Dome Tweeter Speaker
24	3.5" Disk Drive
23	Right Keyb. Cheek Block
22	Left Keyb. Cheek Block
21	Keyboard Assembly
20	Mains Assembly
19	Transformer Assembly

Ref.	Description
54	Audio/Video Interface Board
53	Hard Disk Support
52	Hard Disk
51	Hinge Between Keyb. Front & Top Covers
50	Hinge For Cover Stand
49	Hinge Between Cabinet and Cover
48	Washer For Cover Stand
47	Adhesive Beating Rubber
46	Adhesive Felt
45	Black Cloth
44	Hinge Between Rev. Cover and Cover
43	Net For Speaker Panel
42	Speaker Net
41	Hole Closing Sheet
40	Hole Closing Sheet
39	Heatsink Net
38	Power Switch
37	Hinge Between Keyb. Cover and Front P.

DRW Pannelli	DWG# 550119	PCB#	GENERALMUSIC S.p.A. ITALY
CKD Boccato	DISK: 42 PART: 1/1	GPS2500 Cabinet Assembly	
APP. Falconi	REV: 20-01-97		

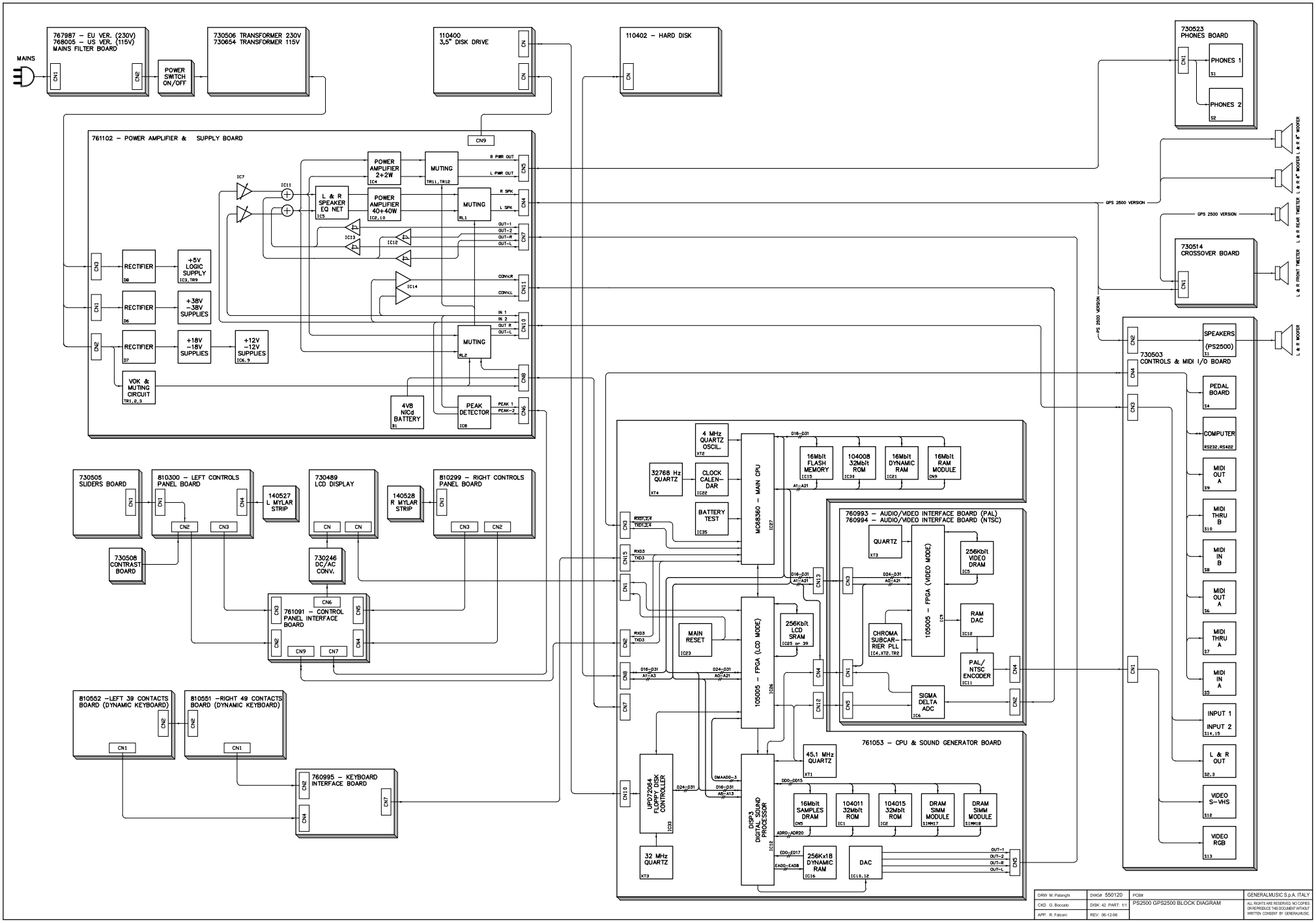

DRW. M. Palangh	DWG# 550120	PCB#	GENERALMUSIC S.p.A. ITALY
CKD. G. Boccato	DISK: 42 PART: 1/1	PS2500 GPS2500 BLOCK DIAGRAM	ALL RIGHTS ARE RESERVED. NO COPIES OR REPRODUCE THIS DOCUMENT WITHOUT WRITTEN CONSENT BY GENERALMUSIC.
APP. R. Falconi	REV: 06-12-96		

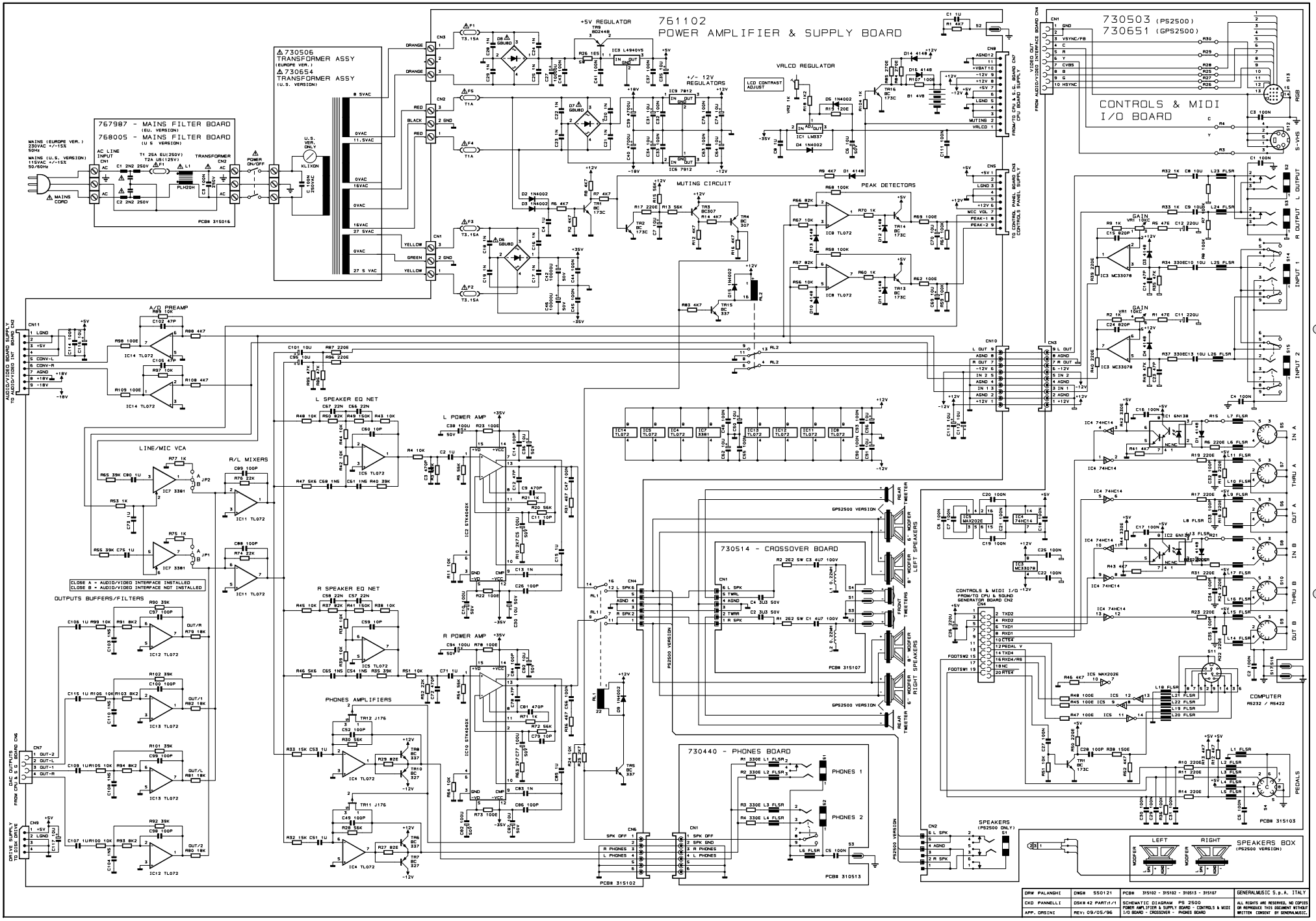
761102
POWER AMPLIFIER & SUPPLY BOARD
730503 (PS2500)
730651 (GPS2500)
CONTROLS & MIDI
I/O BOARD
767987 - MAINS FILTER BOARD
768005 - MAINS FILTER BOARD
730506
TRANSFORMER ASSY
(EU. VERSION)
730654
TRANSFORMER ASSY
(U.S. VERSION)
+5V REGULATOR
+/- 12V
REGULATORS
VARLCD REGULATOR
MUTING CIRCUIT
PEAK DETECTORS
A/D PREAMP
LINE/MIC VCA
R/L MIXERS
L SPEAKER EQ NET
R SPEAKER EQ NET
L POWER AMP
R POWER AMP
PHONES AMPLIFIERS
OUTPUTS BUFFERS/FILTERS
730514 - CROSSOVER BOARD
730440 - PHONES BOARD
SPEAKERS
(PS2500 ONLY)
SPEAKERS BOX
(PS2500 VERSION)
COMPUTER
RS232 / RS422
GAIN
CLOSE A = AUDIO/VIDEO INTERFACE INSTALLED
CLOSE B = AUDIO/VIDEO INTERFACE NOT INSTALLED
GENERALMUSIC S.p.A. ITALY
SCHEMATIC DIAGRAM PS 2500
POWER AMPLIFIER & SUPPLY BOARD - CONTROLS & MIDI I/O BOARD - CROSSOVER - PHONES BOARD
ALL RIGHTS ARE RESERVED. NO COPIES OR REPRODUCE THIS DOCUMENT WITHOUT WRITTEN CONSENT BY GENERALMUSIC.

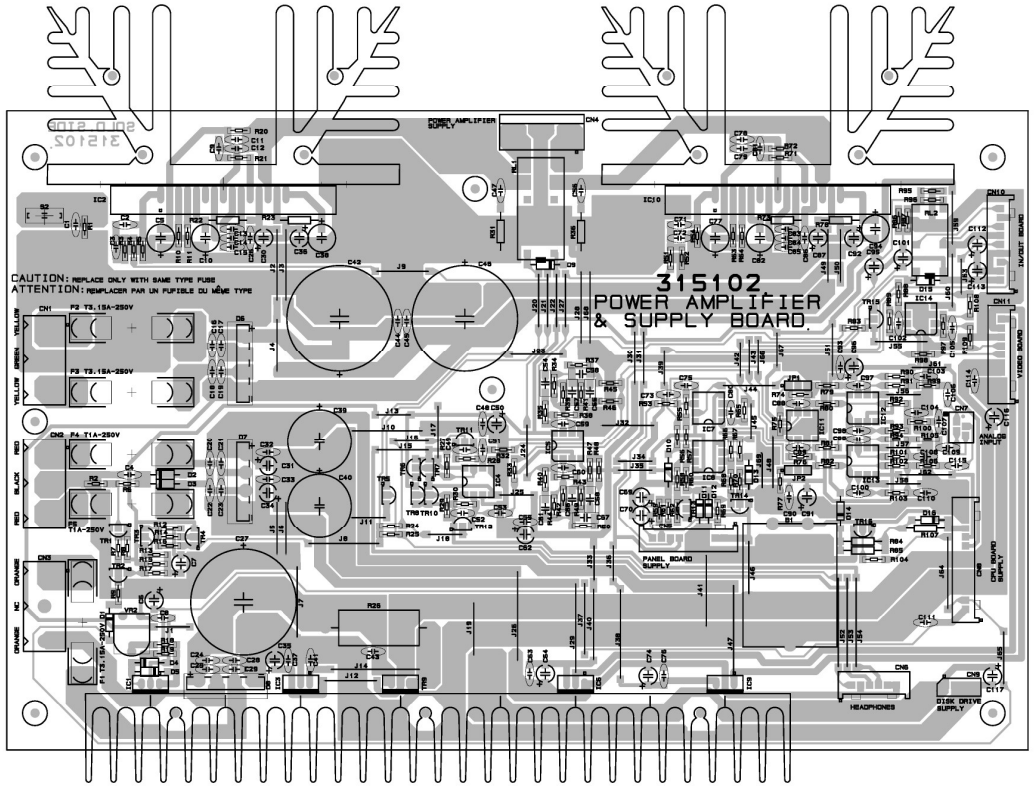

POWER AMPLIFIER & SUPPLY BOARD (PCB LAYOUT).

CROSS OVER BOARD (PCB LAYOUT).

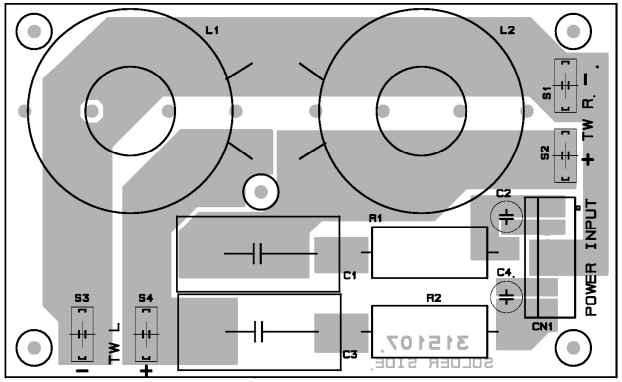

KEYBOARD INTERFACE BOARD (PCB LAYOUT).

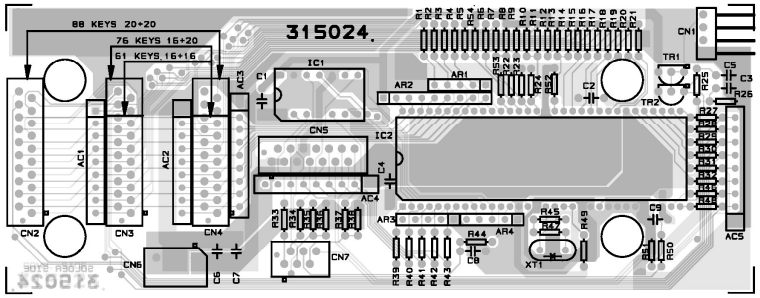

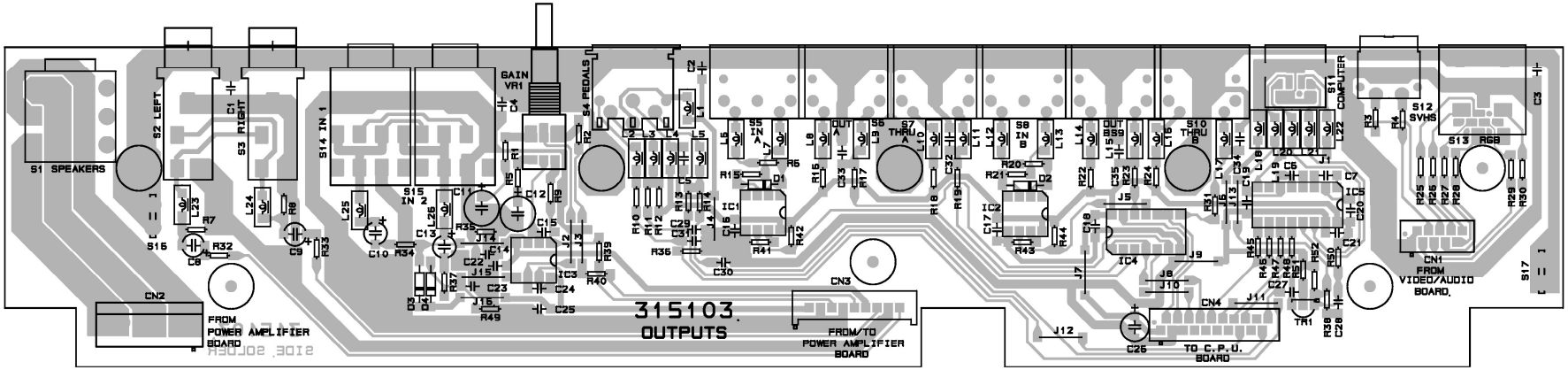

CONTROLS & MIDI I/O BOARD (PCB LAYOUT).

DRW: BOCCATO	DWG: 315102-315103 315024-315107	SCHEMATIC DIAGRAM PS2500	GENERALMUSIC S.p.A. Italy
CKD: RICCOBELLI	DISK: 42 PART: 1/1	Pwr Amp. & Sup. B. - Controls & MIDI I/O B. - XOver - Keyb. Interf. (Pcb Layout)	ALL RIGHTS ARE RESERVED. NO COPIES OR REPRODUCE THIS DOCUMENT WITHOUT WRITTEN CONSENT BY GENERALMUSIC.
APP: PANNELLI	REV: 08-01-97		

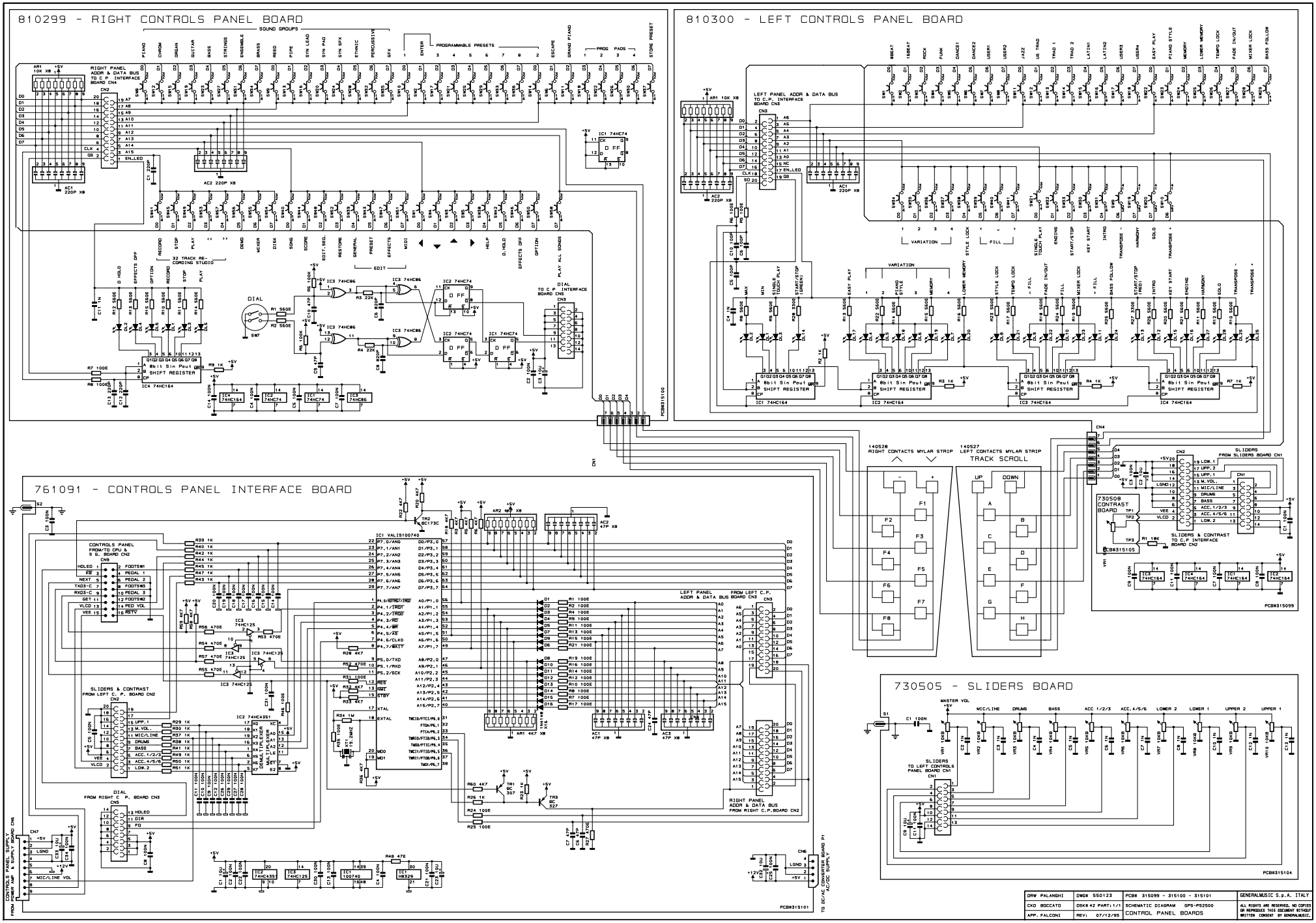
810299 - RIGHT CONTROLS PANEL BOARD
810300 - LEFT CONTROLS PANEL BOARD
761091 - CONTROLS PANEL INTERFACE BOARD
730505 - SLIDERS BOARD
SOUND GROUPS
PROGRAMMABLE PRESETS
RIGHT PANEL ADDR & DATA BUS TO C.P. INTERFACE BOARD CN4
LEFT PANEL ADDR & DATA BUS TO C.P. INTERFACE BOARD CN3
32 TRACK RECORDING STUDIO
EDIT
DIAL
SHIFT REGISTER
140528 RIGHT CONTACTS MYLAR STRIP
140527 LEFT CONTACTS MYLAR STRIP
TRACK SCROLL
730508 CONTRAST BOARD
SLIDERS & CONTRAST TO C.P. INTERFACE BOARD CN2
SLIDERS FROM SLIDERS BOARD CN1
CONTROLS PANEL FROM/TO CPU & S.G. BOARD CN2
SLIDERS & CONTRAST FROM LEFT C.P. BOARD CN2
DIAL FROM RIGHT C.P. BOARD CN3
LEFT PANEL ADDR & DATA BUS BOARD CN3
RIGHT PANEL ADDR & DATA BUS FROM RIGHT C.P.BOARD CN2
TO DC/AC CONVERTER BOARD P1 AC/DC SUPPLY
FROM CONTROLS PANEL SUPPLY DC/DC AMP & SUPPLY BOARD CN6
SLIDERS TO LEFT CONTROLS PANEL BOARD CN1
MASTER VOL
MIC/LINE
DRUMS
BASS
ACC 1/2/3
ACC.4/5/6
LOWER 2
LOWER 1
UPPER 2
UPPER 1
DRW PALANGHI
DWG# 550123
PCB# 315099 - 315100 - 315101
GENERALMUSIC S.p.A. ITALY
CKD BOCCATO
DSK# 42 PART:1/1
SCHEMATIC DIAGRAM GPS-PS2500
APP. FALCONI
REV: 07/12/95
CONTROL PANEL BOARDS
ALL RIGHTS ARE RESERVED, NO COPIES OR REPRODUCE THIS DOCUMENT WITHOUT WRITTEN CONSENT BY GENERALMUSIC.

LEFT CONTROLS PANEL BOARD (PCB LAYOUT).

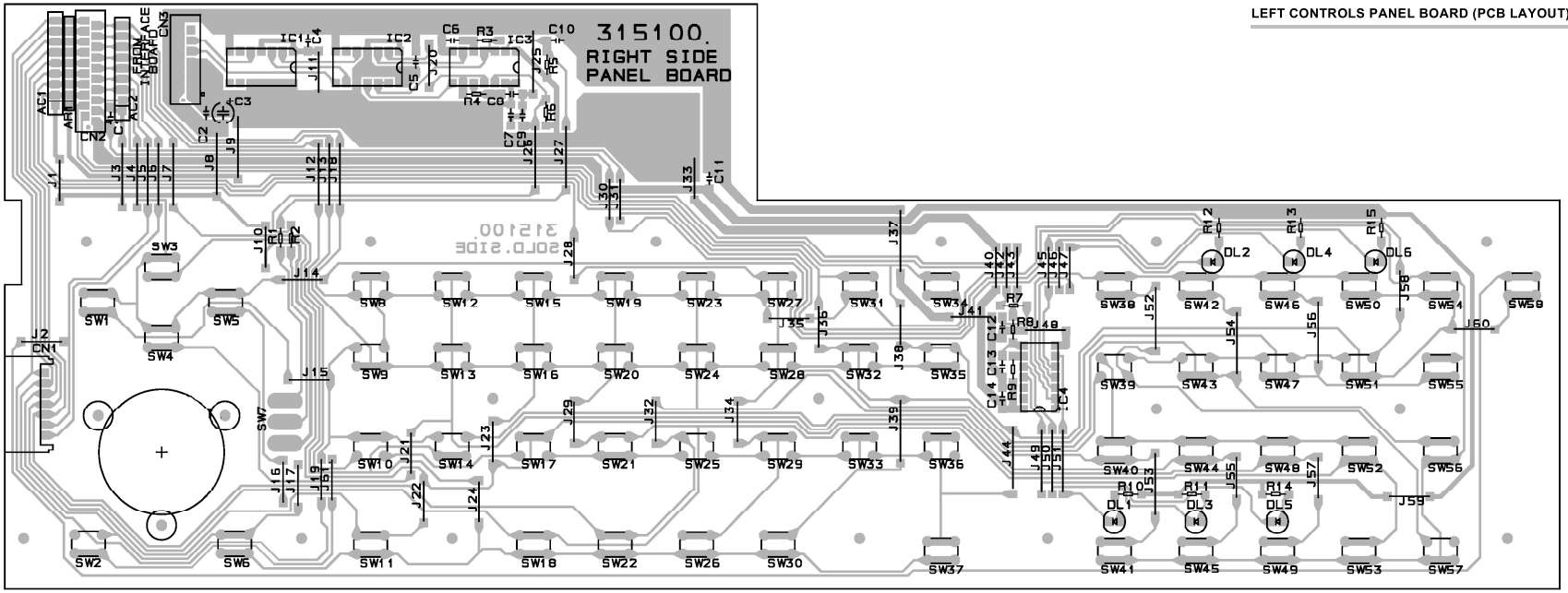

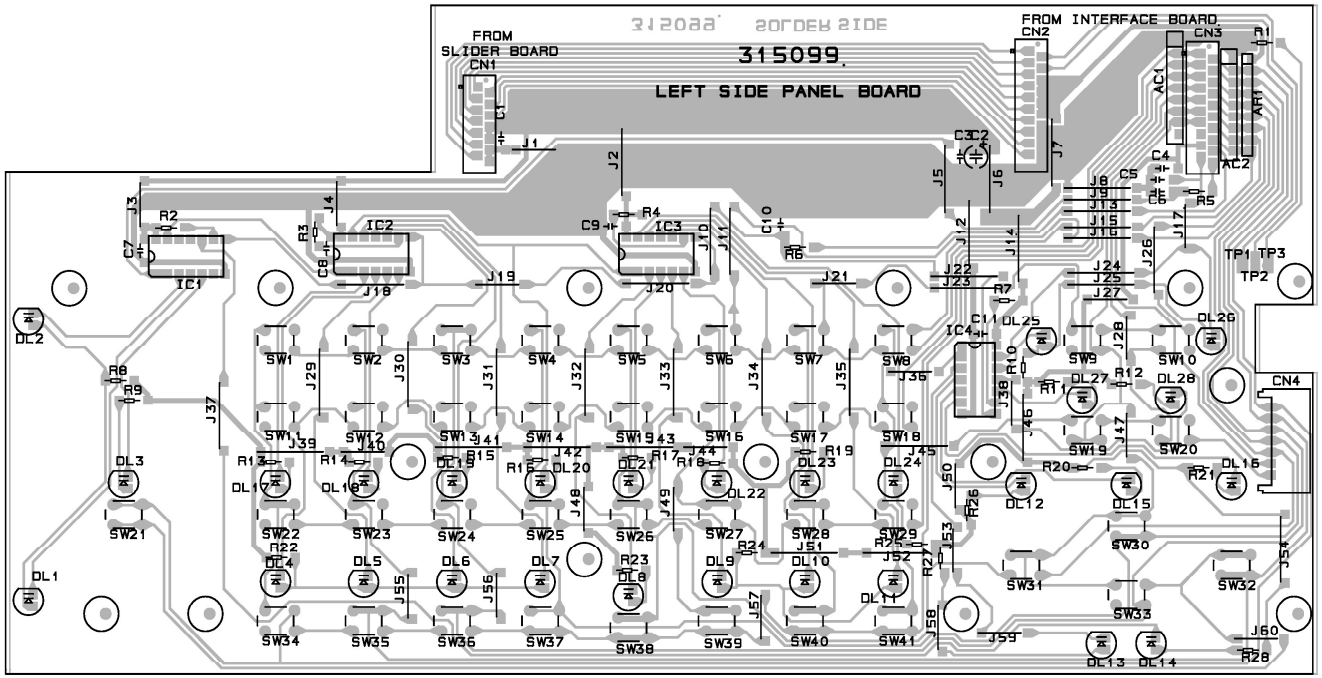

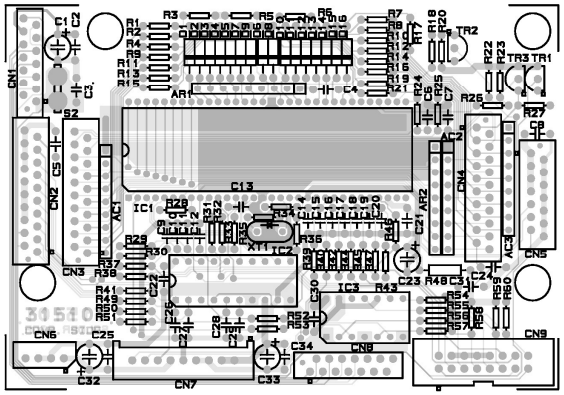

CONTROLS PANEL INTERFACE BOARD (PCB LAYOUT).

RIGHT CONTROLS PANEL BOARD (PCB LAYOUT).

DRW: BOCCATO	DWG: 315099-315100-315101	SCHEMATIC DIAGRAM **PS2500**	GENERALMUSIC S.p.A. Italy
CKD: RICCOBELLI	DISK: 42 PART: 1/1	L & R Control Panel Board - Control Panel Interface Board (Pcb Layout)	
APP: PANNELLI	REV: 08-01-97		

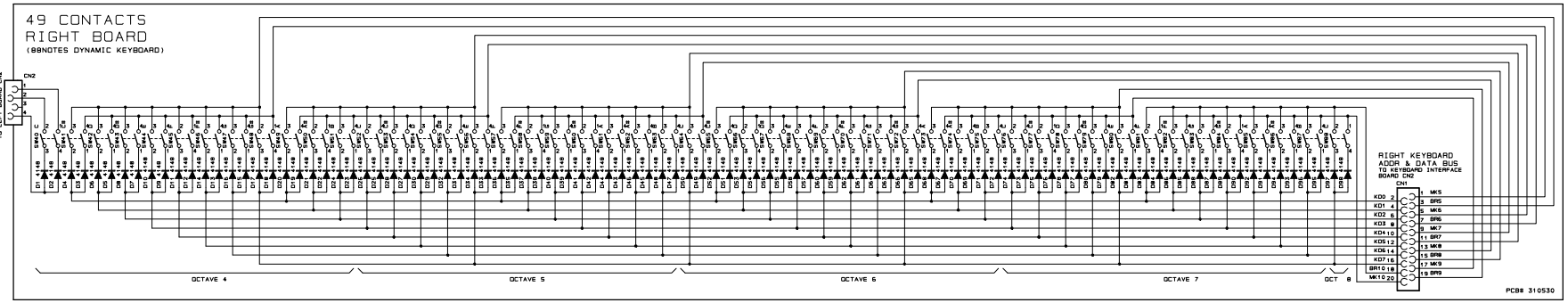

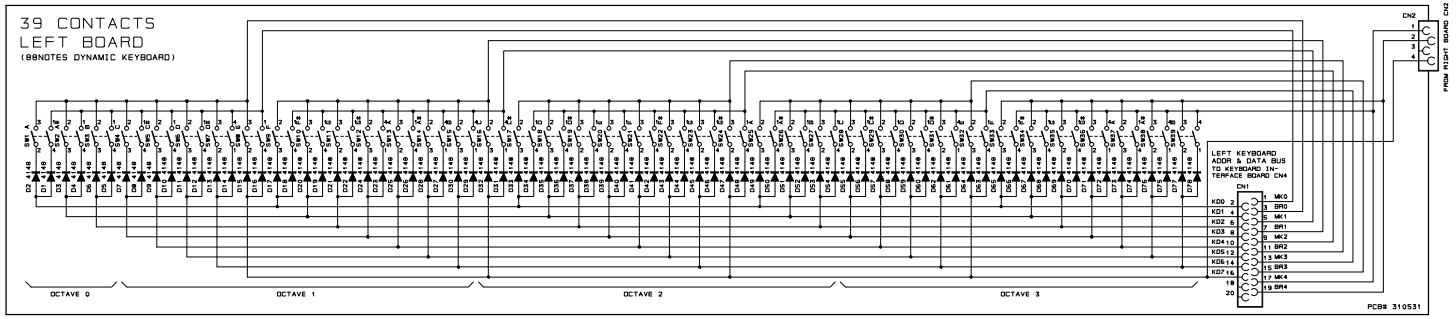

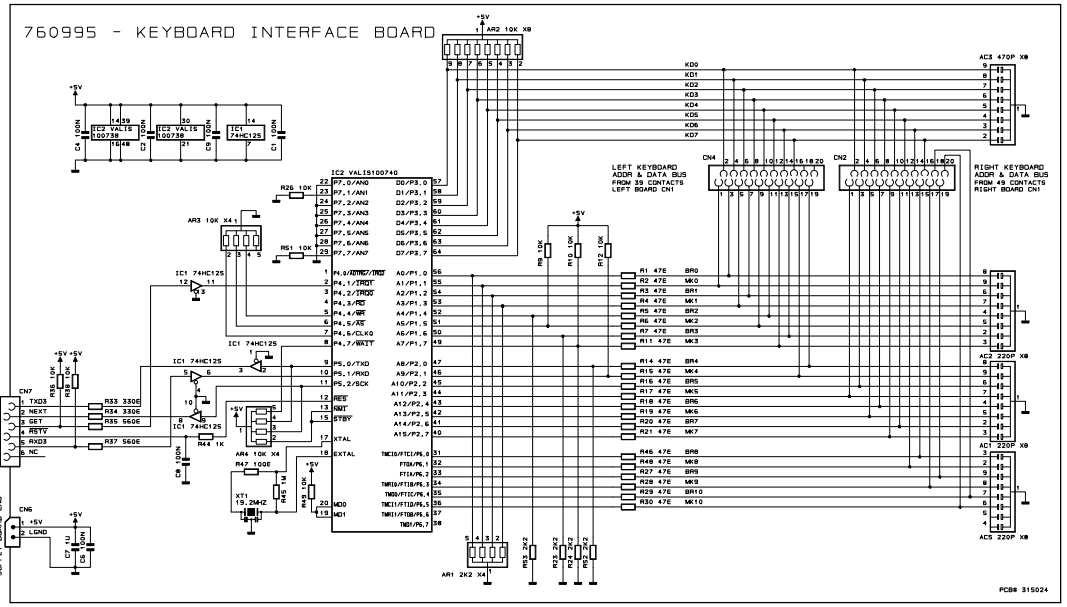

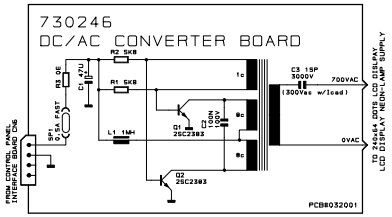

KEYBOARD - COMPUTER CONNECTIONS

APPLE MACINTOSH RS422 CONNECTION

mini DIN 8poles, male — FRONT VIEW

1 HSKo	HSKo 1
2 HSKi	HSKi 2
3 TXD-	TXD- 3
4 GND	GND 4
5 RXD-	RXD- 5
6 TXD+	TXD+ 6
7 GPI	GPI 7
8 RXD+	RXD+ 8
shield (sometime omitted)	

mini DIN 8poles, male — FRONT VIEW

IBM PC/AT RS232 CONNECTION

mini DIN 6poles, male — FRONT VIEW

DIN-Subminiature 9poles, female — FRONT VIEW

1 RTS	RTS 7
2 CTS	CTS 8
3 TXD	TXD 3
4 GND	GND 5
5 RXD	RXD 2
shield (sometime omitted)	

mini DIN 6poles, male — FRONT VIEW

DIN-Subminiature 9poles, female — FRONT VIEW

1 RTS	RTS 4
2 CTS	CTS 5
3 TXD	TXD 2
4 GND	GND 7
5 RXD	RXD 3
shield (sometime omitted)	

DRW BOCCATO	DWG# 550122	PCB# 310531 310530 315024 032001		GENERALMUSIC S.p.A. ITALY
CKD GIORGI	DSK# 14 PART:1/1	SCHEMATIC DIAGRAM GPS 2500 - PS 2500 CONTACTS BOARD & KEYBOARD INTEFACE BOARD - CONVERTER BOARD		ALL RIGHTS ARE RESERVED. NO COPIES OR REPRODUCE THIS DOCUMENT WITHOUT WRITTEN CONSENT BY GENERALMUSIC.
APP. GALANTI	REV: 12/05/95			

POWER ON/OFF, RESET

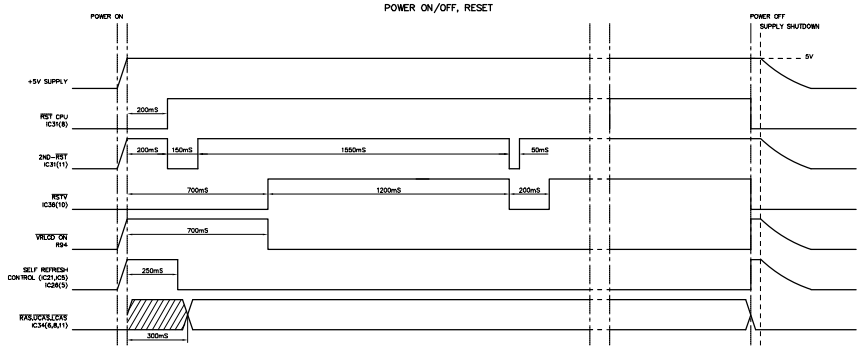

DISP 3 TIMING

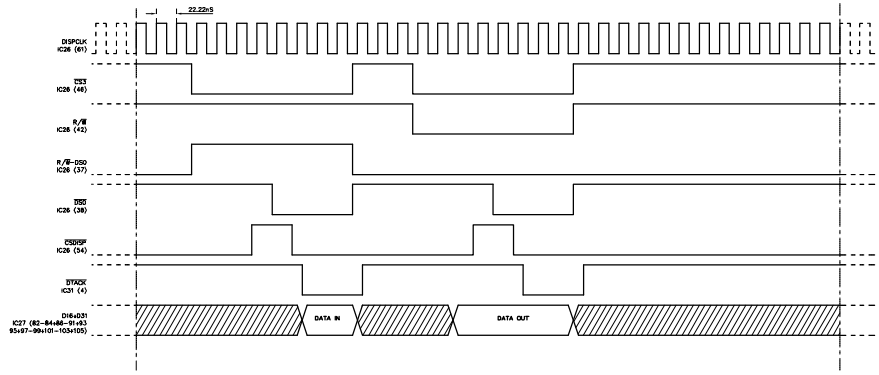

PCM SERIAL DATA BUS

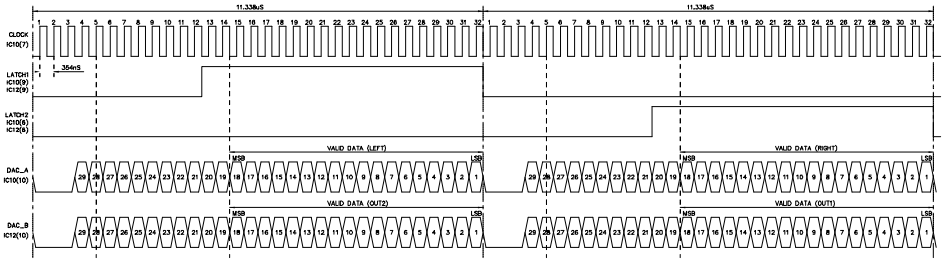

NOTE: ALL COMPONETS PIN REFERENCE ARE LOCATED ON "CPU & SOUND GENERATOR BOARD" UNLESS OTHERWISE SPECIFIED.

LCD TIMING

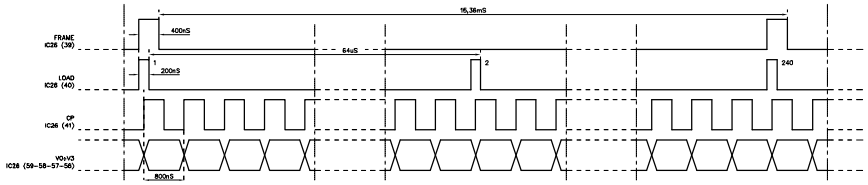

VIDEO TIMING

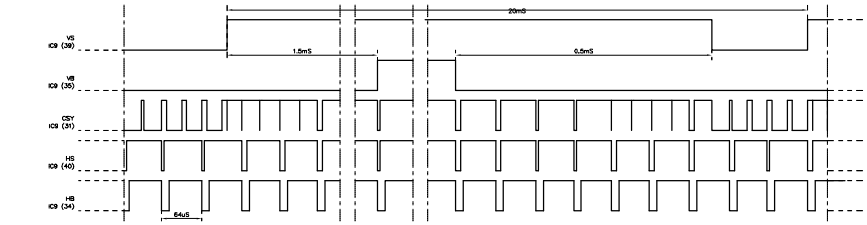

FLOPPY DISK DRIVE AND HARD DISK TIMINGS

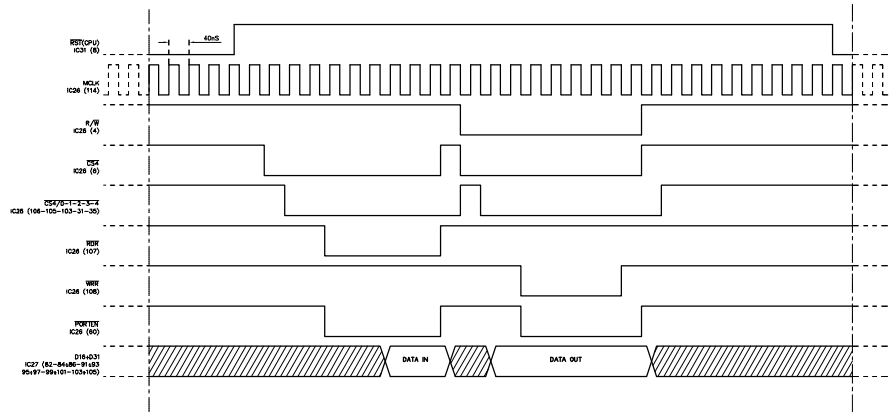

ADJUSTMENTS TABLE

N.	ADJUSTMENT TYPE	TEST POINT	KEY PRESSED	OPERATION POINT	READING VALUE	NOTE:
1	LCD CONTRAST ADJ.	SEE NOTE	NONE	VR2 POWER AMPLIFIER & SUPPLY BOARD	SEE NOTE	PUT THE CONTRAST POTENTIOMETER ON THE CONTROLS PANEL AT HALF STROKE. TURN THE TRIMMER TO OBTAIN THE BEST CONTRAST. VERIFY THE ADJUSTMENT MOVING THE POTENTIOMETER.
2	COMP OUTY CICLE ADJ	R25 SIDE IC9 AUDIO VIDEO I. BOARD	NONE	C51 AUDIO/VIDEO I. BOARD	SEE NOTE	SET THE OSCILLOSCOPE ON D.C. AT 1V/div. 50uS/div. TURN THE TRIMMER TO HAVE DUTY CICLE MORE CLOSE AS POSSIBLE TO 50%. VERIFY THE ADJUSTMENT WITH A MONITOR ATTACHED TO VIDEO OUT SOCKET.

DRW BOCCATO	DWG# 550126	SCHEMATIC DIAGRAM PS2500	GENERALMUSIC Sp.A. ITALY
CKD RICCOBELLI	DISK: 42 PART:	TIMING TABLE & ADJ. TABLE	
APP. PANNELLI	REV: 05-11-98		

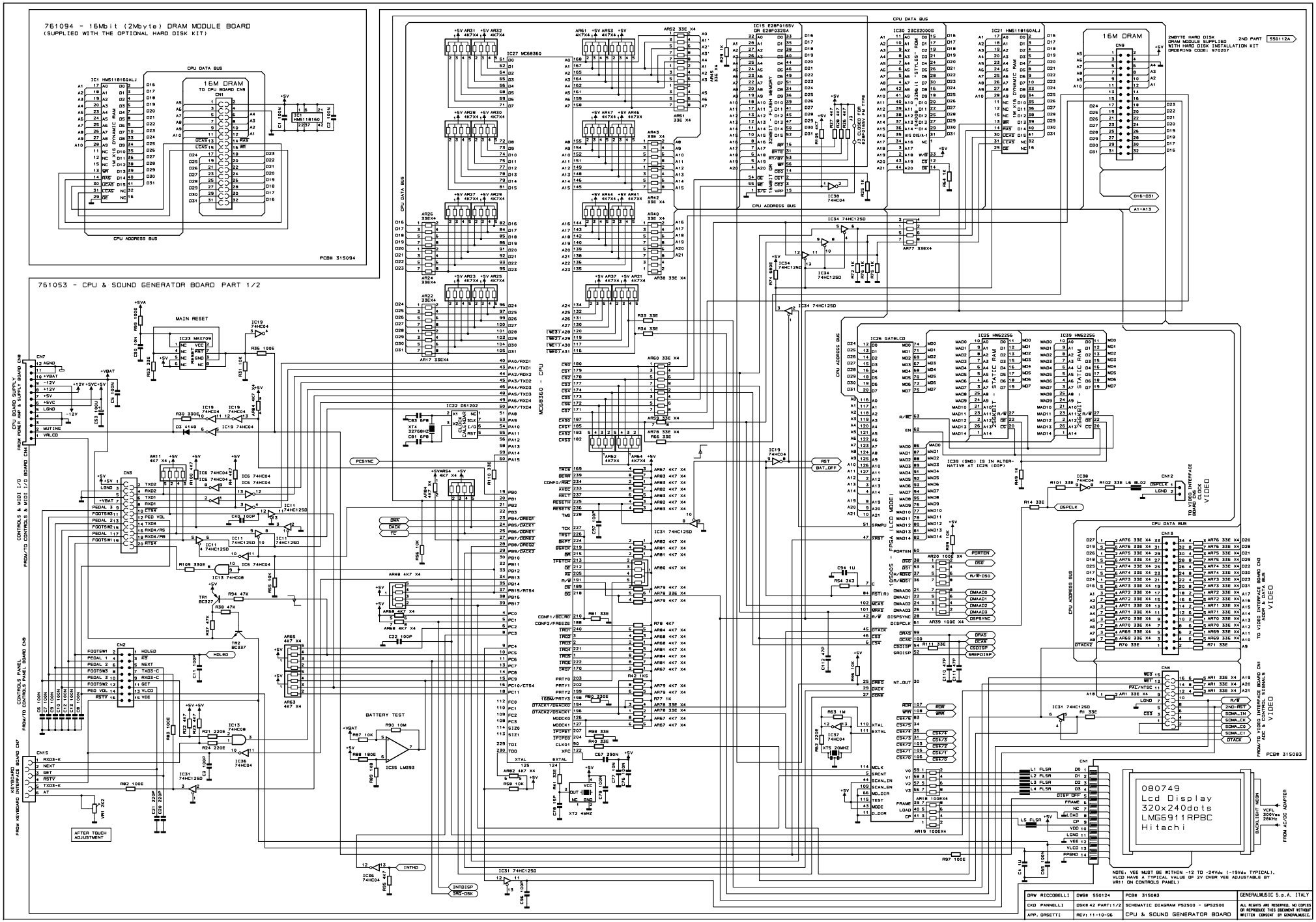
761094 - 16Mbit (2Mbyte) DRAM MODULE BOARD
(SUPPLIED WITH THE OPTIONAL HARD DISK KIT)
16M DRAM
TO CPU BOARD CN9
CPU DATA BUS
CPU ADDRESS BUS
PCB# 315094
761053 - CPU & SOUND GENERATOR BOARD PART 1/2
MAIN RESET
BATTERY TEST
CPU DATA BUS
CPU ADDRESS BUS
MC68360
MC68350 - CPU
IC26 GATELCD
IC25 HM62256
IC39 HM62256
16M DRAM
2MBYTE HARD DISK DRAM MODULE SUPPLIED WITH HARD DISK INSTALLATION KIT ORDERING CODE: 970207
2ND PART
080749
Lcd Display
320x240dots
LMG6911RPBC
Hitachi
NOTE: VEE MUST BE WITHIN -12 TO -24Vdc (-19Vdc TYPICAL).
VLCD HAVE A TYPICAL VALUE OF 2V OVER VEE ADJUSTABLE BY
VR11 ON CONTROLS PANEL)
PCB# 315083
DRW RICCOBELLI
CKD PANNELLI
APP. ORSETTI
DSK# 42 PART:1/2
REV: 11-10-96
SCHEMATIC DIAGRAM PS2500 - GPS2500
CPU & SOUND GENERATOR BOARD
GENERALMUSIC S.p.A. ITALY
ALL RIGHTS ARE RESERVED, NO COPIES OR REPRODUCE THIS DOCUMENT WITHOUT WRITTEN CONSENT BY GENERALMUSIC.

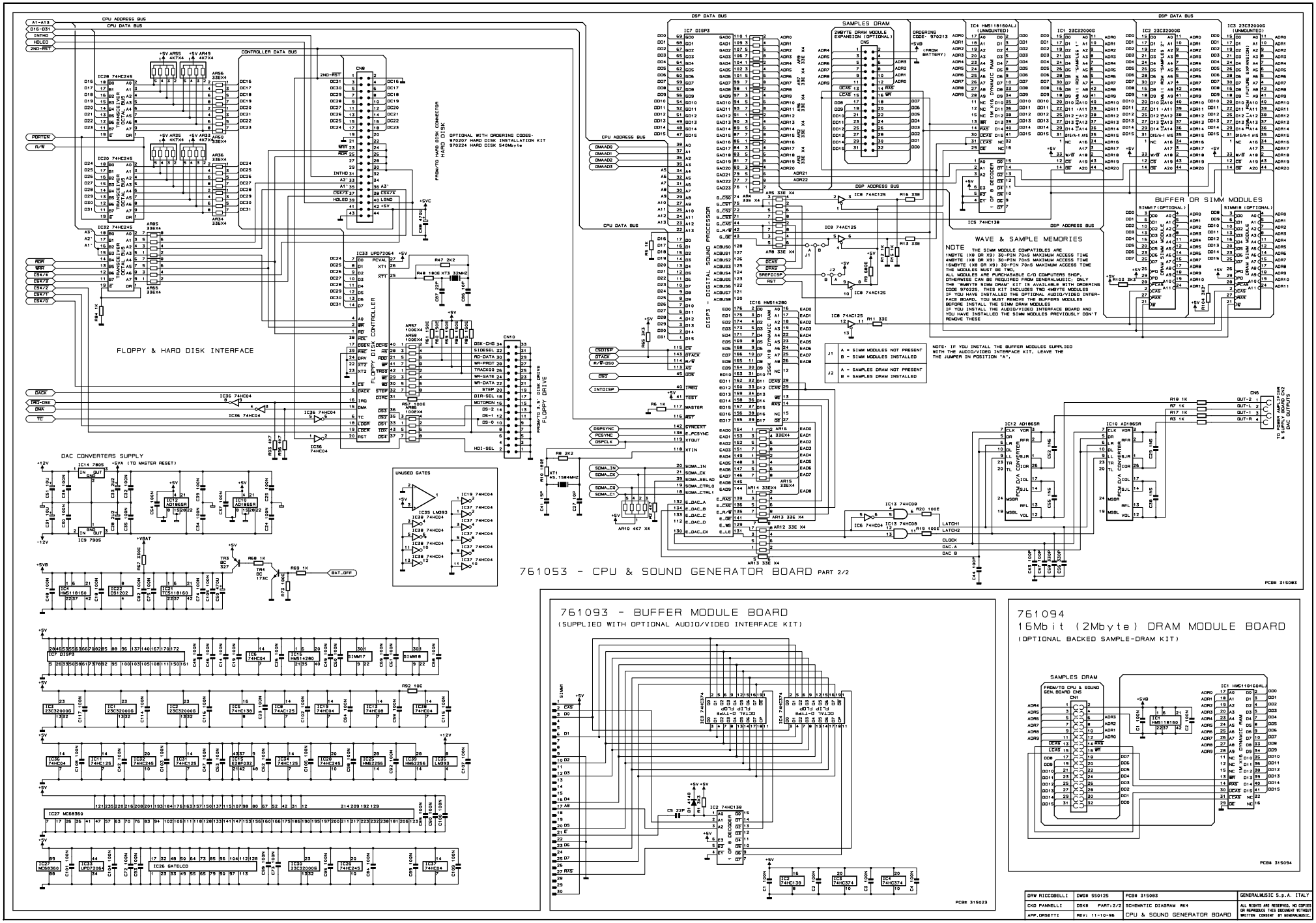

761093 - BUFFER MODULE BOARD

(SUPPLIED WITH OPTIONAL AUDIO/VIDEO INTERFACE KIT)

761094
16Mbit (2Mbyte) DRAM MODULE BOARD

(OPTIONAL BACKED SAMPLE-DRAM KIT)

DRW RICCOBELLI	DWG# 550125	PCB# 315093	GENERALMUSIC S.p.A. ITALY
CKD PANNELLI	DSK# PART:2/2	SCHEMATIC DIAGRAM WK4	ALL RIGHTS ARE RESERVED, NO COPIES OR REPRODUCE THIS DOCUMENT WITHOUT WRITTEN CONSENT BY GENERALMUSIC.
APP.ORSETTI	REV: 11-10-96	CPU & SOUND GENERATOR BOARD	

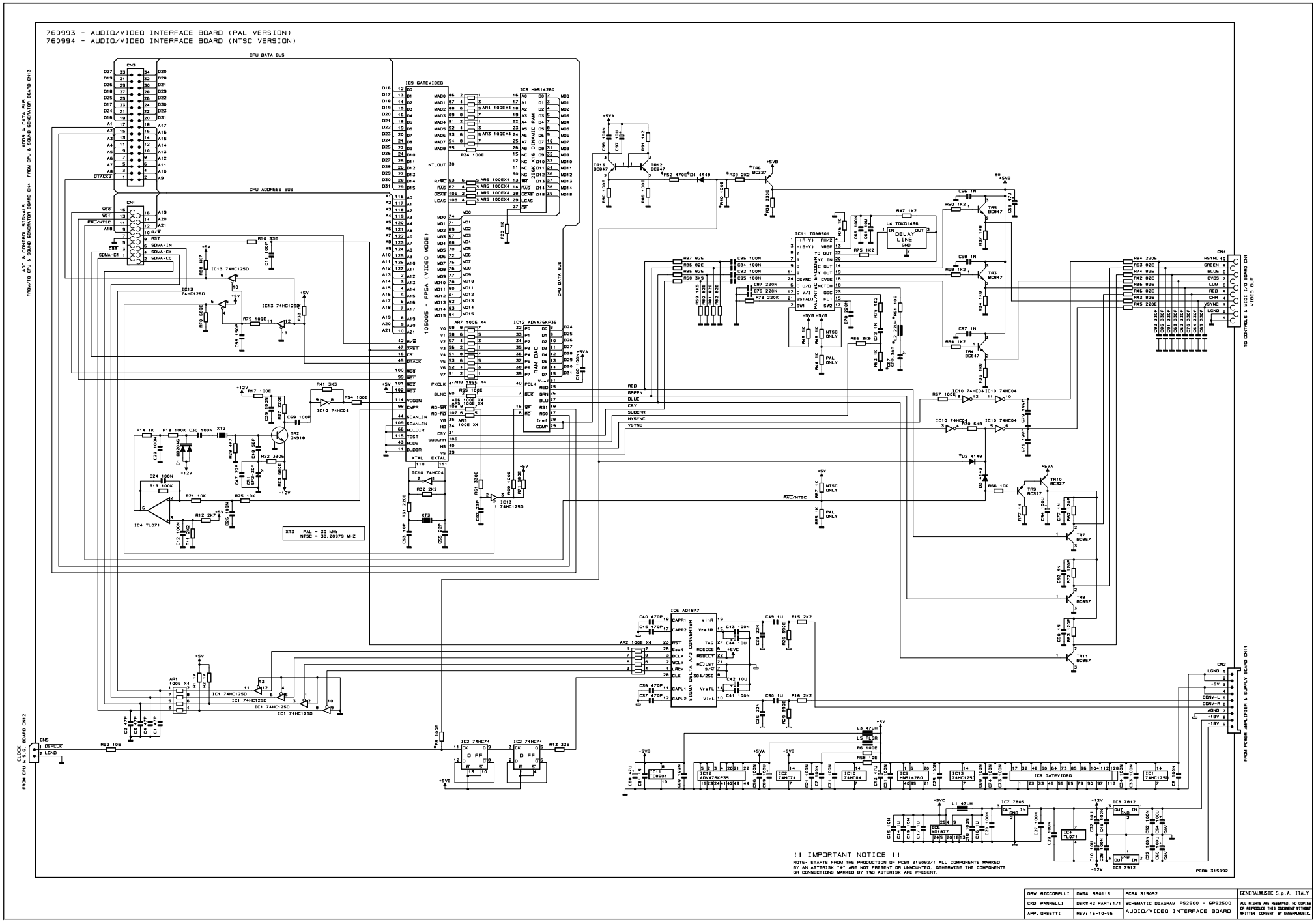
760993 - AUDIO/VIDEO INTERFACE BOARD (PAL VERSION)
760994 - AUDIO/VIDEO INTERFACE BOARD (NTSC VERSION)
CPU DATA BUS
CPU ADDRESS BUS
IC9 GATEVIDEO
IC5 HM614260
IC12 ADV476KP35
IC6 AD1977
IC11 TDA9501
105005 - FPGA (VIDEO MODE)
XT3 PAL = 30 MHz
NTSC = 30.20979 MHz
!! IMPORTANT NOTICE !!
NOTE: STARTS FROM THE PRODUCTION OF PCB# 315092/1 ALL COMPONENTS MARKED BY AN ASTERISK '*' ARE NOT PRESENT OR UNMOUNTED, OTHERWISE THE COMPONENTS OR CONNECTIONS MARKED BY TWO ASTERISK ARE PRESENT.
PCB# 315092
DRW RICCOBELLI
DWG# 550113
PCB# 315092
GENERALMUSIC S.p.A. ITALY
CKD PANNELLI
DSK# 42 PART:1/1
SCHEMATIC DIAGRAM PS2500 - GPS2500
APP. GASETTI
REV: 16-10-96
AUDIO/VIDEO INTERFACE BOARD
ALL RIGHTS ARE RESERVED, NO COPIES OR REPRODUCE THIS DOCUMENT WITHOUT WRITTEN CONSENT BY GENERALMUSIC.

CPU & SOUND GENERATOR BOARD (PCB LAYOUT).

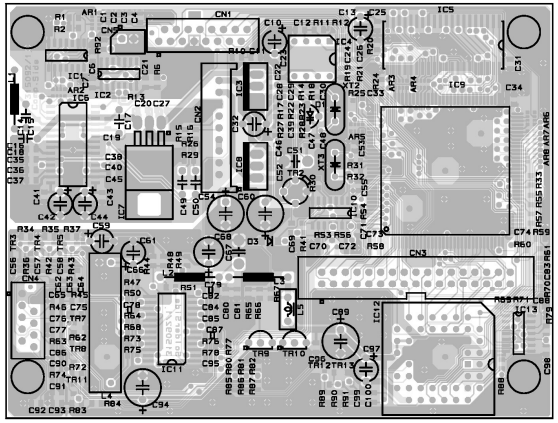

AUDIO / VIDEO INTERFACE BOARD (PCB LAYOUT).

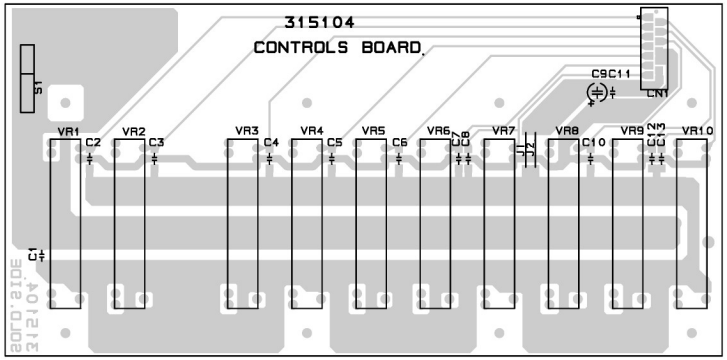

SLIDERS BOARD (PCB LAYOUT).

DRW: PALANGHI	DWG: 315083-315092 315104	SCHEMATIC DIAGRAM PS2500	GENERALMUSIC S.p.A. Italy
CKD: BOCCATO	DISK: 42 PART: 1/1	Cpu & Sound Generator Board - Audio/ Video Interface - Sliders B.(Pcb Layout)	ALL RIGHTS ARE RESERVED. NO COPIES OR REPRODUCE, THIS DOCUMENT WITHOUT WRITTEN CONSENT BY GENERALMUSIC.
APP: FALCONI	REV: 08-01-97		

KIT 970241 (PAL) - KIT 970245 (NTSC) - Audio/Video interface mounting instructions:

- Locate the CPU Board [A] and insert the buffer modules [2] into the connectors [H].
- Connect the cable [3] to the CPU board.
- Fix the AUDIO/VIDEO Board [1] to the threaded locations of the support [B] by means of the screw [8].
- Connect the cables [3-4-5-6-7] to the AUDIO/VIDEO Board [1] and to the CPU [A] and amplifier [D] boards.
- Check that the two jumpers JP1 e JP2 [E] are set to position "A", and that the jumper J1 [F] is set to position "A".

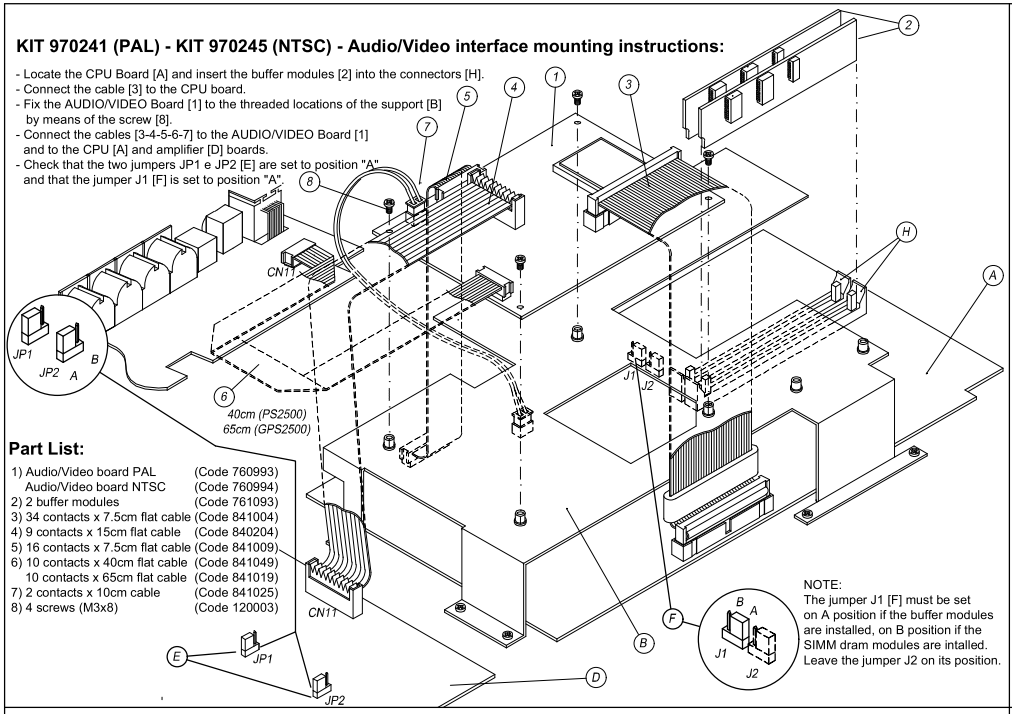

Part List:

1) Audio/Video board PAL	(Code 760993)
Audio/Video board NTSC	(Code 760994)
2) 2 buffer modules	(Code 761093)
3) 34 contacts x 7.5cm flat cable	(Code 841004)
4) 9 contacts x 15cm flat cable	(Code 840204)
5) 16 contacts x 7.5cm flat cable	(Code 841009)
6) 10 contacts x 40cm flat cable	(Code 841049)
10 contacts x 65cm flat cable	(Code 841019)
7) 2 contacts x 10cm cable	(Code 841025)
8) 4 screws (M3x8)	(Code 120003)

KIT 970207 - Hard disk installation kit mounting instructions:

- Locate the CPU board [A] and remove the support [B] by screwing the locking screws [6].
- Insert the DRAM module [2] into the CPU's CN9 connector [C].
- Replace the support [B].
- Fix the mounting brakets [4] to the Hard Disk [1] by means of the four screw [5] and fix the assembly to the threaded locations [E] by means of the four screws [5].
- Connect one end of the jumper [3] to the Hard Disk connector, starting from the extreme left end in order that 4 free pins remain to the right of the connector, and the other end to the CPU's CN8 connector [D].

Part List:

1) 16Mbit DRAM module	(Code 761094)
2) 44 contacts x 7.5 cm flat cable	(Code 840824)
3) 2 mounting brackets	(Code 171250)
4) 8 screws (M3x4)	(Code 120113)

NOTE: The optional Generalmusic Hard Disk (Code 970224) is not supplied with this kit. Hard Disks are avalaible from special outlets with the same technical characteristics as the optional Generalmusic hard disk.
If you mount the optional Generalmusic hard disk DO NOT FORMAT THE DEVICE, because it is supplied already formatted and filled with various styles, samples and songs.

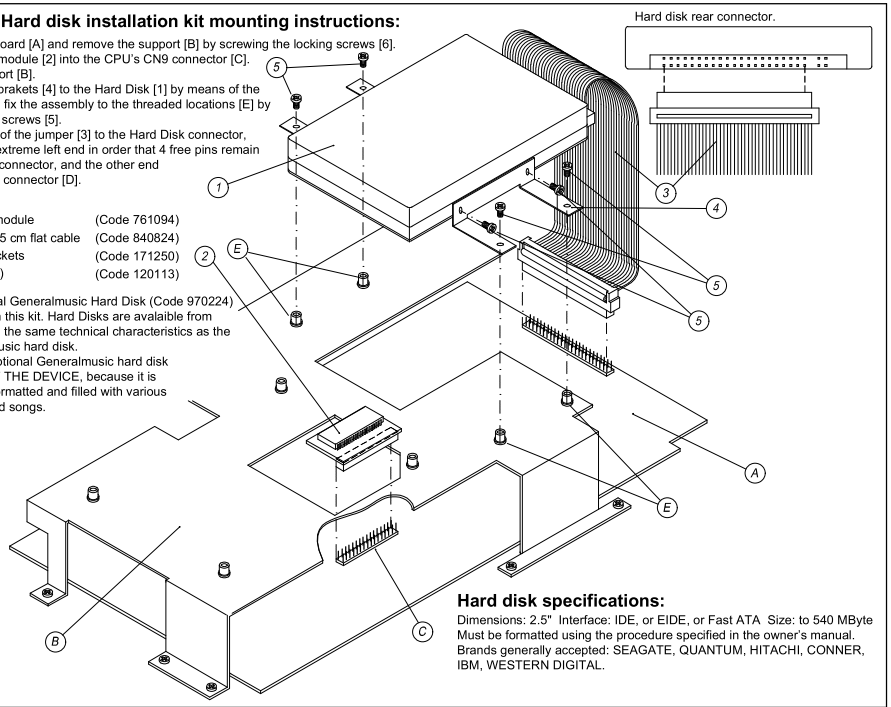

Hard disk specifications:

Dimensions: 2.5" Interface: IDE, or EIDE, or Fast ATA Size: to 540 MByte
Must be formatted using the procedure specified in the owner's manual.
Brands generally accepted: SEAGATE, QUANTUM, HITACHI, CONNER, IBM, WESTERN DIGITAL.

GPS-PS2500 & SK76
KIT 970225 - Volatile SIMM Dram modules mounting instructions:

- Locate the CPU board [A].
- Insert the Simm modules [2] into the CPU's SIMM17-18 connectors [H].
The operations can be carried out without removing the support [B].
Check that the jumpers J1 [F] are set to position "B".

Part List:

1) N° 2 4Mbyte 70ns Dram module	(Code 760994)

NOTE: the SIMM module compatibles are:
1 Mbyte (x8 or x9) 30-pin 70ns maximum access time.
4 Mbyte (x8 or x9) 30-pin 70ns maximum access time.
16 Mbyte (x8 or x9) 30-pin 70ns maximim access time.
The modules must be two.

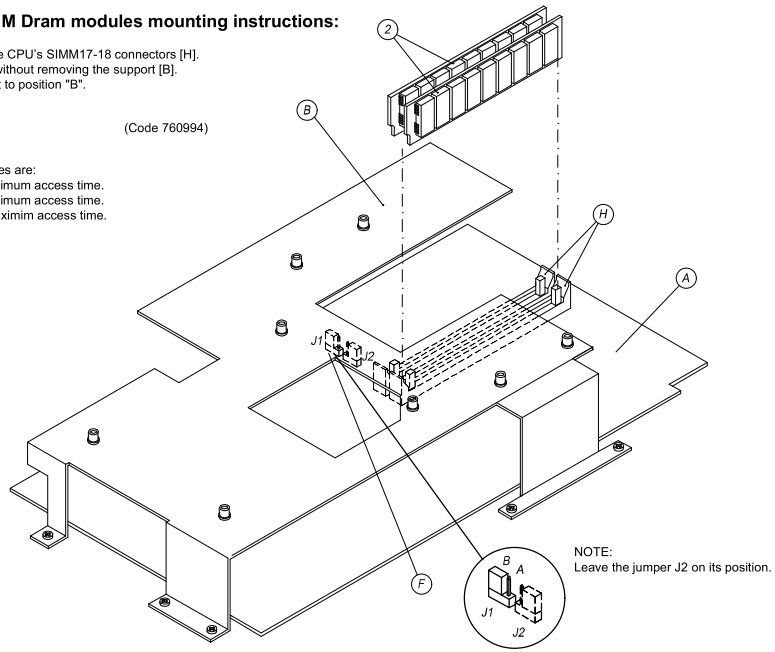

KIT 970213 - Backed Samples Dram mounting instructions:

- Locate the CPU board [A].
- Insert the DRAM module [1] into the CPU's CN5 connector[I].
The operations can be carried out without removing the support [B].
Check that the jumper J2 [G] is set to position "B".

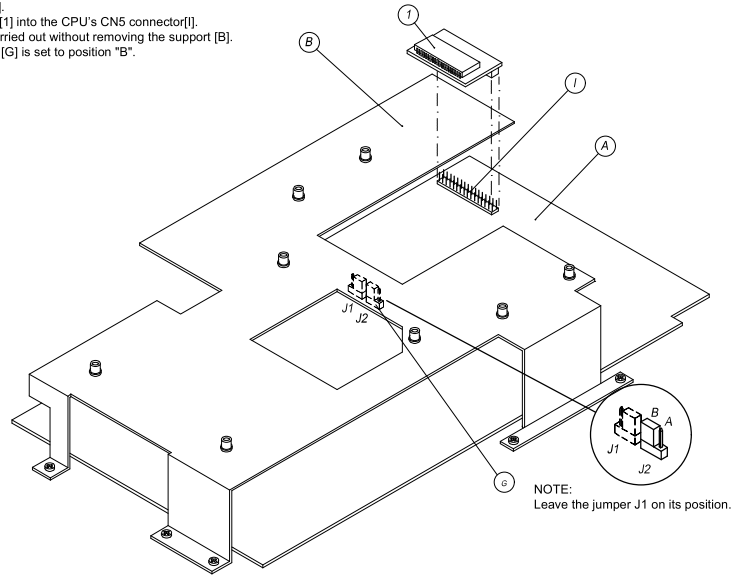

DRW Boccato	DWG# 550129	PCB#	GENERALMUSIC S.p.A. ITALY
CKD Boccato	DISK: 42 PART: 1/1	Optional Accessories Installation Instructions	ALL RIGHTS ARE RESERVED. NO COPIES OR REPRODUCE THIS DOCUMENT WITHOUT WRITTEN CONSENT BY GENERALMUSIC.
APP. Falconi	REV: 20/12/96		

Spare Part List

Legend

GPS2500	= Specify GPS2500 version only
PS2500	= Specify PS2500 version only
Baldwin	= Specify Baldwin version only
B	= Specify Black version
W	= Specify White version
R	= Specify Rosewood version
N	= Specify Walnut version
US	= Specify 115Vac United State mains version
EU	= Specify 230Vac Europe mains version

for Generalmusic and common parts the specification is omitted

code		description

Optional Accessories

130301		**2mt Midi Cable**
130429		**3mt RS232 Cable (MiniDin 8 To D-Sub 9)**
970213		**Backed Sample Dram**
761094	*	16Mbit Dram Module
140923	**	32 Contacts Vert Female Connector
104009	**	HM5118160ALJ 16Mbit Dram Ta=70nS
970207		**Hard Disk Installation Kit**
840824	*	44 Wires 7.5cm Length Flat Cable
761094	*	16Mbit Dram Module
140923	**	32 Contacts Vert Female Connector
104009	**	HM5118160ALJ 16Mbit Dram Ta=70nS
171250	*	Hard Disk Support
970224		**Hard Disk Unit**
110402	*	Hard Disk (type depend by availability)
970225		**Volatile SIMM Dram**
100742	*	4MByte SIMM Module
970245		**NTSC Audio/Video Interface Kit (US)**
970241		**PAL Audio/Video Interface Kit (EU)**
841004	*	34 Wires 7.5cm Length Flat Cable
841049	*	10 Wires 40cm Length Flat Cable
841019	*	10 Wires 65cm Length Flat Cable
840009	*	16 Wires 7.5cm Length Flat Cable
840204	*	9 Wires 15cm Length Flat Cable
841025	*	2 Wires 10cm Length Screened Cable
761093	*	Buffer Module Board (Pcb# 315023)
103013	**	74HC138D SOIC 1 Of 8 Decoder
103003	**	74HC374DW SOIC Octal D-Type Flip-Flop
760994	*	Audio/Video Interf. Board (Pcb# 315092) (NTSC Version)
760993	*	Audio/Video Interf. Board (Pcb# 315092) (PAL Version)
230582	**	LC Delay Line 400ns 0.5MHz
230569	**	FL5R200PNT EMI Coil For Signal
230561	**	47uH 10% 100mA RF-Coil
230560	**	22uH 10% 170mA RF-Coil
141016	**	16 Contacts Vert Female Connector
141013	**	10 Contacts Vert Female Connector
140866	**	34 Contacts Vert Male Connector
140324	**	9 Contacts Vert Male Connector
105005	**	FPGA - Video/Lcd Controller
104003	**	HM514260JP SOJ Dynamic Ram 4Mbit Ta=70ns
103012	**	74HC125D SOIC Quad Tri-State Buffer
103011	**	AD1877 SOIC Dual Channel 1bit ADC
103010	**	74HC04D SOIC Hex Inverter
103007	**	74HC74D SOIC Dual Flip-Flop
100739	**	ADV476 Color Palette Ram Dac
100059	**	7805 +5V 1A Voltage Regulator
100045	**	7812 +12V 1A Voltage Regulator
100043	**	7912 -12V 1A Voltage Regulator
100019	**	TL071 LN J-Fet Operational Amplifier
091001	**	BC857 TO236 Smd Pnp Transistor
091000	**	BC847 TO236 Smd Npn Transistor
090153	**	BC327 TO92 Pnp Transistor
090102	**	2N918 VHF Npn Transistor
081000	**	PMLL4148 Smd 100mA 75V Signal Diode
080500	**	BB204G Dual Varicap Diode
010717	**	30.20979MHz Quartz Resonator (NTSC Version)
010716	**	7.15909MHz Quartz Resonator (NTSC Version)
010715	**	8.867238MHz Quartz Resonator (PAL Version)
010714	**	30MHz Quartz Resonator (PAL Version)
010602	**	5p2-30pF N750 Ceramic Capacitor Trimmer
130428	*	3mt Video Cable (Din/Rgb To Rca) (NTSC Version)
130317	*	3mt Video Cable (Din/Rgb To Scart) (PAL Version)
120003	*	M3x8mm Screw

Accessories

300617		Owner's Manual Folder
300628		Owner's Manual Folder (Baldwin)
271061		Owner's Manual (Italian Language)
271100		Owner's Manual (English Language)
271075		Owner's Manual (Baldwin) (English Version)
955959		Disk "Operating System"
955956		Disk "Demo 02"
955955		Disk "Demo 01"
955960		Disk "Operating System" (Baldwin)
955958		Disk "Demo 02" (Baldwin)
955957		Disk "Demo 01" (Baldwin)
970280		**Pianist's Bench (R)**
970046		**Pianist's Bench (R) (Baldwin)**
970281		**Pianist's Bench (N)**
970242		**Pianist's Bench (B) (GPS2500)**
970127		**Pianist's Bench (B) (PS2500)**
970131		**Pianist's Bench (W)**
510164	*	Bench Wooden Parts (R)
510165	*	Bench Wooden Parts (N)
510105	*	Bench Wooden Parts (R) (Baldwin)
510130	*	Bench Wooden Parts (B) (GPS2500)
510107	*	Bench Wooden Parts (B) (PS2500)
510120	*	Bench Wooden Parts (W)
261356	**	Cross Bar (R)
261357	**	Cross Bar (N)
261041	**	Cross Bar (R) (Baldwin)
261105	**	Cross Bar (B)
261048	**	Cross Bar (B) (Bright Black)
261069	**	Cross Bar (W)
261352	**	Leg (R)
261353	**	Leg (N)
261042	**	Leg (R) (Baldwin)
261104	**	Leg (B)
261047	**	Leg (B) (Bright Black)
261068	**	Leg (W)
261040	**	Cushion (B) (R)
261046	**	Cushion (N)
261070	**	Cushion (W)
340140	*	Plastic Foot
150618	*	Thumbscrew
120679	*	Assembling Joint-Nut
120550	*	Assembling Screw-Washer
120090	*	Assembling Screw-Bolt

PS2500 Cabinet & Stand Assembly

830604		**Stand Assembly (N)**
830598		**Stand Assembly (R)**
830586		**Stand Assembly (R) (Baldwin)**
830590		**Stand Assembly (B) (Baldwin)**
830591		**Stand Assembly (W) (Baldwin)**
720408	*	Triple Pedal Assembly
810168	**	Reed Switch Board (Pcb#310272)
770717	**	Pedals Cable
500063	**	Mechanical Parts
340105	***	Plastic Support
171261	***	Chassis Support
170880	***	Screen Panel
170875	***	Right Pedal
170874	***	Left Pedal
170873	***	Centre Pedal
170777	***	Pedal Return Spring
340500	**	Potentiometer Lever
340499	**	Actuating Lever
340274	**	Pedal Rubber
210016	**	1x10mm Adhesive Black Felt (specify mt)
190181	**	Pedals Clog
190178	**	Permanent Magnet
190015	**	Adhesive Rubber Foot
171264	**	Lever Washer
171263	**	Potentiometer Return Spring
171262	**	Potentiometer Support
150066	**	Cable Clamping
070556	**	20K Lin (90deg. Stroke) Potentiometer
710397	*	Speaker Box Assembly (N)
710394	*	Speaker Box Assembly (R)
710362	*	Speaker Box Assembly (R) (Baldwin)
710378	*	Speaker Box Assembly (B) (Baldwin)
710379	*	Speaker Box Assembly (W) (Baldwin)
770752	**	Speakers Cable Ass'y
150021	***	Cord Lock
130270	***	Speakers Cable
261343	**	Speaker Box (N)
261131	**	Speaker Box (R)
260555	**	Speaker Box (R) (Baldwin)
260588	**	Speaker Box (B) (Baldwin)
260587	**	Speaker Box (W) (Baldwin)
660407	*	Speaker Box Fixing
660285	*	Cabinet Fixing
510161	*	Stand Wooden Parts (N)
510158	*	Stand Wooden Parts (R)
510119	*	Stand Wooden Parts (R) (Baldwin)
510141	*	Stand Wooden Parts (B) (Baldwin)
510142	*	Stand Wooden Parts (W) (Baldwin)
261348	**	Right Side Leg (N)
261130	**	Right Side Leg (R)
260561	**	Right Side Leg (R) (Baldwin)
260590	**	Right Side Leg (B) (Baldwin)
260589	**	Right Side Leg (W) (Baldwin)
261347	**	Left Side Leg (N)
261129	**	Left Side Leg (R)
260560	**	Left Side Leg (R) (Baldwin)
260592	**	Left Side Leg (B) (Baldwin)
260591	**	Left Side Leg (W) (Baldwin)
261346	**	Pedal Cross Bar (N)
261136	**	Pedal Cross Bar (R)
260946	**	Pedal Cross Bar (R) (Baldwin)
260964	**	Pedal Cross Bar (B) (Baldwin)
260599	**	Pedal Cross Bar (W) (Baldwin)
340159	*	3M Dual Lock Fastening (Specify mt)
260559	*	Speaker Cloth Panel
220114	*	8ohm 70W 8" Woofer Speaker
210242	*	Filler for Speaker Box
210074	*	Speaker Cloth
210021	*	1x15mm Adhesive Red Felt (specify mt)
170585	*	Metal Foot
710395		**Cabinet Assembly (N)**
710396		**Cabinet Assembly (R)**
710366		**Cabinet Assembly (R) (Baldwin)**
710376		**Cabinet Assembly (B) (Baldwin)**
710377		**Cabinet Assembly (W) (Baldwin)**
660406	*	Music Stand Stop Bar
660405	*	Heatsink Grid
660403	*	Music Stand Hinge
510162	*	Cabinet Wooden Parts (N)
510159	*	Cabinet Wooden Parts (R)
510128	*	Cabinet Wooden Parts (R) (Baldwin)
510143	*	Cabinet Wooden Parts (B) (Baldwin)
510144	*	Cabinet Wooden Parts (W) (Baldwin)
261350	**	Cover (N)
261135	**	Cover (R)
260576	**	Cover (R) (Baldwin)
260593	**	Cover (B) (Baldwin)
260594	**	Cover (W) (Baldwin)
261349	**	Cabinet (N)
261147	**	Cabinet (R)
260577	**	Cabinet (R) (Baldwin)
260586	**	Cabinet (B) (Baldwin)
260585	**	Cabinet (W) (Baldwin)
261146	**	Music Stand (N)
261137	**	Music Stand (R)
261123	**	Music Stand (R) (Baldwin)
261124	**	Music Stand (B) (Baldwin)
260600	**	Music Stand (W) (Baldwin)
210017	*	2x10mm Adhesive Black Felt (specify mt)
171331	*	Left Cover Clamp
171330	*	Right Cover Clamp
660390		Keyboard Cover Handle (N) (R)
660391		Keyboard Cover Handle (B)
660517		Keyboard Cover Handle (W)
660284		Heatsink Grid
651559		Right Panel Support (N) (R) (B)
651579		Left Panel Support (W)
651558		Left Panel Support (N) (R) (B)
651578		Right Panel Support (W)
340821		Music Stand Stop
340545		Black Rubber Foot
340807		Keyboard Slope Support (TP10)
340253		Bar Centre Bush
340247		Toothed-Wheel
340246		Rack
340116		Adhesive Clamp For Pedals Cable
261345		Rear Keyboard Cover (N)
261134		Rear Keyboard Cover (R)
260562		Rear Keyboard Cover (R) (Baldwin)
260596		Rear Keyboard Cover (B) (Baldwin)
260595		Rear Keyboard Cover (W) (Baldwin)
261344		Front Keyboard Cover (N)
261133		Front Keyboard Cover (R)
260558		Front Keyboard Cover (R) (Baldwin)
260597		Front Keyboard Cover (B) (Baldwin)
260598		Front Keyboard Cover (W) (Baldwin)
229015		8ohm 100W 1" Dome Tweeter Speaker
210091		2x20mm Adhesive Black Felt (specify mt)
210017		2x10mm Adhesive Black Felt (specify mt)
210016		1x10mm Adhesive Black Felt (specify mt)
171402		Control Panel Rear Support
171331		Left Cover Clamp
171330		Right Cover Clamp
171307		Video Board Support
171306		CPU Board Support
171294		Keyboard Cover Wheels Support
171289		Dome Tweeter Support
171286		Disk Drive Group Support
171285		Disk Drive Support
170906		Toothed-Wheels Bar
170864		Hinge Between Rear and Front Keyboard Covers
110400		3.5" Disk Drive
110362		Mains Switch
110083		T2A Fuse 6.3x32mm (US)
110082		T1A Fuse 6.3x32mm (US)
110061		T3.15A Fuse 6.3x32mm (US)
110020		T5A Fuse 5x20mm (EU)
110013		T1.25A Fuse 5x20mm (EU)
110011		T1A Fuse 5x20mm (EU)
110003		T3.15A Fuse 5x20mm (EU)

GPS2500 Cabinet & Stand Assembly

		Stand Assembly
800047		Leg Assembly (B)
800048		Leg Assembly (W)
320818	*	Caster
260248	*	Leg (B)
260254	*	Leg (W)
720430		Pedals Assembly (B)
720476		Pedals Assembly (W)
720467	*	Triple Pedal Assembly
810168	**	Reed Switch Board (Pcb#310272)
770742	**	Pedals Cable
500063	**	Mechanical Parts
340105	***	Plastic Support
171261	***	Chassis Support
170880	***	Screen Panel
170875	***	Right Pedal
170874	***	Left Pedal
170873	***	Centre Pedal
170777	***	Pedal Return Spring
340506	**	Cable Clamping
340500	**	Potentiometer Lever
340499	**	Actuating Lever
340274	**	Pedal Rubber
210016	**	1x10mm Adhesive Black Felt (specify mt)
190181	**	Pedals Clog
190178	**	Permanent Magnet
190015	**	Adhesive Rubber Foot
171264	**	Lever Washer
171263	**	Potentiometer Return Spring
171262	**	Potentiometer Support
070556	**	20K Lin (90deg. Stroke) Potentiometer
660121	*	Pedals Stand (B)
660122	*	Pedals Stand (W)
260249	*	Pedals Top Cover (B)
260255	*	Pedals Top Cover (W)
210042	*	2x10mm Adhesive Spik (specify mt)
210021	*	1x15mm Adhesive Red Felt (specify mt)
170858	*	Pedals Brace
190193		Hexagonal Rod
150618		Thumbscrew
120523		M 6 Black Grower Washer
120456		M 6x1.5mm Black Washer
120070		M 6x20mm Black Screw
		Cabinet Assembly
660405	*	Heatsink Grid
660280	*	Speaker Grid
660110	*	Grid For Speaker Panel
510126	*	Wooden Parts (B)
510136	*	Wooden Parts (W)
510134	*	Wooden Parts (B) (Baldwin)
510137	*	Wooden Parts (W) (Baldwin)
260969	**	Speakers Panel
260569	**	Keyboard Cover (B)
260570	**	Keyboard Cover (W)
260568	**	Cabinet Chassis (B)
260571	**	Cabinet Chassis (W)
260578	**	Cabinet Chassis (B) (Baldwin)
260579	**	Cabinet Chassis (W) (Baldwin)
260566	**	Front Panel (B)
260572	**	Front Panel (W)
260563	**	Speaker Box
260343	**	Front Cross Bar (B)
260354	**	Front Cross Bar (W)
260342	**	Revolving Cover (B)
260344	**	Revolving Cover (W)
260341	**	Cover Stand (B)
260353	**	Cover Stand (W)
260339	**	Music Stand (B)
260351	**	Music Stand (W)
260338	**	Revolving Keyboard Cover (B)
260350	**	Revolving Keyboard Cover (W)
260334	**	Cover (B)
260346	**	Cover (W)
320452	*	Pivot For Cover Stand
320090	*	Hinge Between Rev. Cover And Cover
320066	*	Hinge For Music Stand
320065	*	Hinge Between Keyb. Front And Top Covers
210242	*	Filler for Speaker Box
210074	*	Speaker Cloth
210016	*	1x10mm Adhesive Black Felt (specify mt)
190111	*	Adhesive Beating Rubber
170866	*	Hinge For Cover Stand
170864	*	Hinge Between Keyb. Cover And Front Panel
170863	*	Hinge Between Cabinet And Cover
652862		Left Keyb. Cheek Block (B) (GPS2500)
650858		Right Keyb. Cheek Block (B) (GPS2500)
652869		Left Keyb. Cheek Block (W) (GPS2500)
650859		Right Keyb. Cheek Block (W) (GPS2500)
340116		Adhesive Clamp For Pedals Cable
230577		EMI Ferrite For Circular Cable
229015		8ohm 100W 1" Dome Tweeter Speaker
220114		8ohm 70W 8" Woofer Speaker
220093		8ohm 40W 6" Woofer Speaker
220087		8ohm 30W 3" Cone Tweeter Speaker
210091		2x20mm Adhesive Black Felt (specify mt)
210017		2x10mm Adhesive Black Felt (specify mt)
171352		Cone Tweeter Support
171313		Control Panel Rear Support
171312		Control Panel Front Support
171307		Video Board Support
171306		CPU Board Support
171302		Control Panel Right Angular Support
171301		Control Panel Left Angular Support
171299		Control Panel Angular Coupling
171289		Dome Tweeter Support
171286		Disk Drive Group Support
171285		Disk Drive Support
170945		Front Panel Support Square
170389		Rear Cover Support Square
110400		3.5" Disk Drive
110362		Mains Switch
110083		T2A Fuse 6.3x32mm (US)
110082		T1A Fuse 6.3x32mm (US)
110061		T3.15A Fuse 6.3x32mm (US)
110020		T5A Fuse 5x20mm (EU)
110013		T1.25A Fuse 5x20mm (EU)
110011		T1A Fuse 5x20mm (EU)
110003		T3.15A Fuse 5x20mm (EU)

Mains & Transformer Assembly

730475		**Mains Assembly (230Vac) (EU)**
150021	*	Cord Lock (EU)
130294	*	Mains Cord (EU)
730476		**Mains Assembly (115Vac) (US)**
340048	*	Cord Lock (US)
130277	*	Mains Cord (US)
767987		**Mains Filter Board (Pcb#315016) (EU)**
768005		**Mains Filter Board (Pcb#315016) (US)**
230565	*	2.5mH 250V 3A AC Line Filter
140010	*	3 Contacts P=10 Vert Terminal Block
110113	*	Fuse Clip 5x20mm 6A max (EU)
110114	*	Fuse Clip 6.3x32mm 10A Max (US)
020493	*	100n 250Vac MKP EMI Capacitor "Siemens"
010719	*	2n2 250Vac 7A 20% AC Line "Y" Filter "Murata"
730506		**Transformer Assembly (230Vac) (EU)**
730654		**Transformer Assembly (115Vac) (US)**
230128	*	Transformer 230Vac 250W (EU)
230120	*	Transformer 115Vac 250W (US)
190133	*	Lateroid Insulator For Screw Block
140036	*	Screw Block (specify contacts)
020493	*	100n 250Vac MKP EMI Capacitor "Siemens"

Power Amplifier & Supply Board

761102		**Power Amplifier & Supply Board (Pcb#315102)**
141102	*	6 Contacts Vert Male Connector
141010	*	4 Contacts Vert Female Connector
140877	*	Jumper For Contacts Strip (p=2.54mm)
140874	*	Single In Line Vert Male Strip (specify contacts)
140873	*	4 Contacts Vert Male Connector
140325	*	12 Contacts Vert Male Connector
140324	*	9 Contacts Vert Male Connector
140323	*	6 Contacts Vert Male Connector
140010	*	3 Contacts P=10 Vert Terminal Block
110305	*	Relay 12V / 2 Switch 1A 250V
110304	*	Relay 12V / 2 Switch 5A 250V
110119	*	Fuse Clip 10A max (EU) (US)
100907	*	L4940V5 Low Drop +5V 1.3A Regulator
100906	*	CEM3381 Dual V.C.A.

100067	*	LM337 1.2-37V 1.5A Adjustable Regulator
100061	*	TL072 Dual J-Fet Operational Amplifier
100045	*	7812 +12V 1A Voltage Regulator
100043	*	7912 -12V 1A Voltage Regulator
100040	*	STK4040X 70W Hybrid Amplifier
090865	*	BD244B TO220 Pnp Transistor
090856	*	J176 TO92 P-Channel J-Fet Transistor
090192	*	BC307 TO92 Pnp Transistor
090182	*	BC173C TO92 Npn Transistor
090153	*	BC327 TO92 Pnp Transistor
090152	*	BC337 TO92 Npn Transistor
080606	*	GBU8D 8A Rectifier Diodes Bridge
080156	*	1N4002 1A 100V Rectifier Diode
080103	*	1N4148 100mA 75V Signal Diode
030882	*	10000uF 50V Snap-In Electrolytic Capacitor
030880	*	10000uF 25V Snap-In Electrolytic Capacitor
030858	*	4700u 25V 20% Vert Electrolytic Capacitor
110300	*	4.8V 280mAh Nicd Battery

Crossover Board

730514		**Crossover Board (Pcb#315107)**
230537	*	0.22mh 0.75mm Crossover Coil
141102	*	6 Contacts Vert Male Connector
030162	*	3u3 50V 20% Vert Electrolytic Bipolar Capacitor
020930	*	4u7 100V 10% MKT Polyester Capacitor

Phones Assembly

730507		Phones Assembly
730523	*	**Phones Board (Pcb#310513)**
230569	**	FL5R200PNT EMI Coil For Signal
140327	**	6 Contacts Hor Male Connector
140217	**	Horizontal Jack Stereo Slim Socket
140207	**	Horizontal Female Jack Socket
652854	*	Phones Board Support
171327	*	Phones Board Fixing

Keyboard Assembly

720489		**Keyboard & Interface Assembly (TP20)**
720448		**Keyboard & Interface Assembly (TP10)**
840762	*	20 Wires 25cm Length Flat Cable
840761	*	20 Wires 12.5cm Length Flat Cable
760995	*	**Keyboard Interface Board (PCB#315024)**
141018	**	20 Contacts Vert Female Connector
141011	**	6 Contacts Vert Female Connector
140918	**	2 Contacts Hor Male Connector
100740	**	HD6433278 Cpu F=20MHz
100605	**	74HC125 Quad 3-State Buffer
050493	**	10Kx4 1/8w 5% Resistor Array
050492	**	10Kx8 1/8w 5% Resistor Array
050414	**	2K2x4 1/8w 5% Resistor Array
010726	**	19.2MHz Ceramic Resonator With Capacitors
010662	**	220p 10% 50V X8 Cap Array
010661	**	47p 10% 50V X8 Cap Array
720490	*	**Keyboard Assembly (TP20)**
720417	*	**Keyboard Assembly (TP10)**
840738	**	4 Wires x 5cm Flat Cable
810552	**	**39 Contacts L Board For Dynamic Keyb. (PCB#310531)**
340764	***	3 Dual Contacts Rubber Strip
340211	***	12 Dual Contact Rubber Strip
141018	***	20 Contacts Vert Female Connector
141010	***	4 Contacts Vert Female Connector
080103	***	1N4148 100mA 75V Signal Diode
810551	**	**49 Contacts R Board For Dynamic Keyb. (PCB#310530)**
340212	***	13 Dual Contact Rubber Strip
340211	***	12 Dual Contact Rubber Strip
141018	***	20 Contacts Vert Female Connector
141010	***	4 Contacts Vert Female Connector
080103	***	1N4148 100mA 75V Signal Diode
500069	**	**Mechanical Keyboard Assembly (TP20)**
160211	***	Key Return Spring
151172	***	Last C Key
151171	***	First A Key
151170	***	Sharp Key
151169	***	B Key
151168	***	A Key
151167	***	G Key
151166	***	F Key
151165	***	E Key
151164	***	D Key
151163	***	C Key
500065	**	**Mechanical Keyboard Assembly (TP10)**
160202	***	Sharp Key Return Spring
160201	***	Natural Key Return Spring
151128	***	Last C Key
151127	***	First A Key
151126	***	Sharp Key
151125	***	B Key
151124	***	A Key
151123	***	G Key
151122	***	F Key
151121	***	E Key
151120	***	D Key
151119	***	C Key
340092	*	5mm Board Spacer

Control Panel Assembly

820489		Control Panel Assembly (N) (R) (PS2500)
820497		Control Panel Assembly (R) (PS2500) (Baldwin)
820509		Control Panel Assembly (B) (PS2500) (Baldwin)
820510		Control Panel Assembly (W) (PS2500) (Baldwin)
820493		Control Panel Assembly (B) (GPS2500)
820506		Control Panel Assembly (W) (GPS2500)
820503		Control Panel Assembly (B) (GPS2500) (Baldwin)
820507		Control Panel Assembly (W) (GPS2500) (Baldwin)
810300	*	**Left Control Panel Board (Pcb#315099)**
730508	**	Contrast Board (Pcb#315105)
140874	***	Single In Line Vert Male Strip (specify contacts)
070702	***	5K Linear Rotary Potentiometer
141018	**	20 Contacts Vert Female Connector
141015	**	14 Contacts Vert Female Connector
140914	**	7 Contacts Hor Female Zif Mylar Connector
140529	**	Microswitch 12V 50mA 0.25mm
100607	**	74HC164 8bit S To P Shift Register
080743	**	3mm Wide Diffused Green Led
080711	**	3mm High Efficiency Red Led
810299	*	**Right Control Panel Board (Pcb#315100)**
141018	**	20 Contacts Vert Female Connector
141015	**	14 Contacts Vert Female Connector
140914	**	7 Contacts Hor Female Zif Mylar Connector
140529	**	Microswitch 12V 50mA 0.25mm
100620	**	74HC86 Quad 2-Input Exor Gate
100614	**	74HC74 Dual Flip-Flop
100607	**	74HC164 8bit S To P Shift Register
080711	**	3mm High Efficiency Red Led
761091	*	**Control Panel Interface Board (Pcb#315101)**
141018	**	20 Contacts Vert Female Connector
141015	**	14 Contacts Vert Female Connector
140881	**	14 Contacts Vert Female Con. For Mylar Cable
140873	**	4 Contacts Vert Male Connector
140854	**	16 Contacts Vert Male Connector
140324	**	9 Contacts Vert Male Connector
100740	**	HD6433278 Cpu F=20MHz
100645	**	74HC4351 8ch Analog Multiplexer
100605	**	74HC125 Quad 3-State Buffer
090192	**	BC307 TO92 Pnp Transistor
090182	**	BC173C TO92 Npn Transistor
090153	**	BC327 TO92 Pnp Transistor
080103	**	1N4148 100mA 75V Signal Diode
010726	**	19.2MHz Ceramic Resonator With Capacitors
730505	*	**Sliders Board (Pcb#315104)**
141015	**	14 Contacts Vert Female Connector
070551	**	10K Linear 30mm Slider Potentiometer
730489	*	**Lcd Display Assembly**
130600	**	14 Wires 30cm Length Mylar Flat Cable
080749	**	Lcd Display 320X240 dots LMG6911RPBC Hitachi
730246	*	**DC-AC Converter Board (Pcb# Cs032001)**
660277	*	Control Panel (N) (R) (PS2500)
660290	*	Control Panel (R) (PS2500) (Baldwin)
660300	*	Control Panel (B) (PS2500) (Baldwin)
660415	*	Control Panel (W) (PS2500) (Baldwin)
660287	*	Control Panel (B) (GPS2500)
660293	*	Control Panel (W) (GPS2500)
660292	*	Control Panel (B) (GPS2500) (Baldwin)
660294	*	Control Panel (W) (GPS2500) (Baldwin)
651563	*	Cloth For Panel Slits
651561	*	Display Frame (Black)
651564	*	Display Frame (White)
651560	*	Display Glass
340523	*	Spacer H=6,5mm
340522	*	Disk Drive Frame (Black)
340526	*	Disk Drive Frame (Light Gray)
340521	*	Dial Support
340516	*	<EDIT> Rubber Key Pad
340515	*	<SOUND GROUP> Rubber Key Pad
340514	*	<START STOP> Rubber Key Pad
340513	*	<STYLE-GROUP> Rubber Key Pad
340512	*	Slider Potentiometer Guide (Black)
340527	*	Slider Potentiometer Guide (Light Gray)
340494	*	Slider Potentiometer Knob (Black)
340528	*	Slider Potentiometer Knob (Light Gray)
340493	*	Dial Knob (Black)
340529	*	Dial Knob (Light Gray)
340482	*	Display Right Rubber Key Pad
340481	*	Display Left Rubber Key Pad
340466	*	Spacer H=8mm
340155	*	Spacer H=15mm
230584	*	EMI Ferrite For Flat Cable
210093	*	Adhesive Black Felt Strip
210020	*	1.5x12mm Adhesive Red Felt (specify mt)
171288	*	Display Support
171284	*	Boards Support
171283	*	Disk Drive Frame Fixing
171224	*	Dc-Ac Converter Screen
140528	*	Right Contact Mylar Strip (display)
140527	*	Left Contact Mylar Strip (display)
120960	*	Dial Steel Sphere
110254	*	Rotary Encoder With Snap

Controls & Midi I/O Assembly

730673		Controls & Midi I/O Assembly (PS2500)
730504		Controls & Midi I/O Assembly (PS2500) (Baldwin)
730650		Controls & Midi I/O Assembly (GPS2500)
730503	*	**Controls & Midi I/O Board (Pcb#315103) (PS2500)**
730651	*	**Controls & Midi I/O Board (Pcb#315103) (GPS2500)**
230569	**	FL5R200PNT EMI Coil For Signal
141102	**	6 Contacts Vert Male Connector
141018	**	20 Contacts Vert Female Connector
141013	**	10 Contacts Vert Female Connector
140324	**	9 Contacts Vert Male Connector
140248	**	4 Poles Mini Din Female Socket
140247	**	8p Mini Din Female Socket
140231	**	Horizontal Jack Stereo Socket (with dual switch)
140228	**	Horizontal Jack Stereo Asme
140219	**	Horizontal Female 13 Poles Din Socket
140217	**	Horizontal Jack Stereo Slim Socket
140216	**	Horizontal Female 6 Poles Din Socket
140212	**	Horizontal Female 5 Poles Din Socket
100919	**	MC33078 Dual LN J-Fet Operational Amplifier
100734	**	MAX202E RS232 Drivers/Receiver
100618	**	74HC14 Hex Inverter Schmitt Trigger
100035	**	6N138 Optocoupler
090182	**	BC173C TO92 Npn Transistor
080103	**	1N4148 100mA 75V Signal Diode
071011	**	2x10K Alog Rotary Pot
660423	*	Controls & Midi I/O Board Support (PS2500)
660278	*	Controls & Midi I/O Board Support (PS2500) (Baldwin)
660286	*	Controls & Midi I/O Board Support (GPS2500)
340503	*	Lower Potentiometer Knob
340502	*	Upper Potentiometer Knob
150474	*	Plug For Unused Hole

Cpu & Sound Generator Board

761104		**Cpu & Sound Generator Board (Pcb#315083)**
230569	*	FL5R200PNT EMI Coil For Signal
230527	*	BL02RN2-R62 EMI Coil For Signal
141018	*	20 Contacts Vert Female Connector
141016	*	16 Contacts Vert Female Connector
141011	*	6 Contacts Vert Female Connector
141010	*	4 Contacts Vert Female Connector
140922	*	32 Contacts Vert Male Strip P=2mm
140917	*	2 Contacts Vert Male Connector
140915	*	44 Contacts Vert Male Strip P=2mm
140913	*	Simm Socket 30 Pin
140881	*	14 Contacts Vert Female Con. For Mylar Cable
140877	*	Jumper For Contacts Strip (p=2.54mm)
140874	*	Single In Line Vert Male Strip (specify contacts)
140866	*	34 Contacts Vert Male Connector
140854	*	16 Contacts Vert Male Connector
140325	*	12 Contacts Vert Male Connector
106003	*	MAX709 Power Monitor With Reset
105005	*	FPGA - Video/Lcd Controller
105004	*	MC68360EM25 Cpu Fc=25MHz
105002	*	DISP3 Digital Sound Processor
104015	*	23C32000G 32Mbit Rom "Samples 2"
104011	*	23C32000G 32Mbit Rom "Samples 1"
104010	*	HM514280AJ 4M5bit Dram Ta=70nS
104009	*	HM5118160ALJ 16Mbit Dram Ta=70nS
104008	*	23C32000G 32Mbit Rom "Styles"
104007	*	E28F016SV-100 1Mbit Flash Rom Ta=100nS
103013	*	74HC138D SOIC 1 Of 8 Decoder
103012	*	74HC125D SOIC Quad Tri-State Buffer
103010	*	74HC04D SOIC Hex Inverter
103004	*	AD1865R SOP 18bit D/A Converter
103002	*	74HC245DW SOIC Octal Bus Transceiver
103001	*	74HC08D SOIC Quad 2-Input And Gate
101502	*	74AC125D SOIC Quad Tri-State Buffer
100904	*	LM393 Dual Comparator
100731	*	DS1202 Clock Calendar
100576	*	HM62256LP-12 Static Ram 256Kbit Ta=120nS
100059	*	7805 +5V 1A Voltage Regulator
100058	*	7905 -5V 1A Voltage Regulator
090182	*	BC173C TO92 Npn Transistor
090153	*	BC327 TO92 Pnp Transistor
090152	*	BC337 TO92 Npn Transistor
081000	*	PMLL4148 Smd 100mA 75V Signal Diode
070160	*	2K2 20% Horizontal Linear Trimmer
010734	*	4MHz Quartz Resonator
010727	*	45.1584MHz Quartz Resonator
010725	*	20MHz Ceramic Resonator With Capacitors
010718	*	32MHz Quartz Resonator
010710	*	32768Hz Quartz Resonator
100733	*	uPD72064 Floppy Disk Controller

Wiring Connections

841014		70cm Dual Wire R/B Cable
841013		75cm Dual Wire R/B Cable
841012		20 Wires 40cm Length Flat Cable
841011		6 Wires 65cm Length Flat Cable
841010		2 Wires 50cm Length Flat Cable
841001		105cm Dual Wire R/B Cable
840849		4 Wires 75cm Length Flat Cable
840841		14 Wires 15cm Length Flat Cable
840840		20 Wires 12.5cm Length Flat Cable
840839		20 Wires 17.5cm Length Flat Cable
840838		20 Wires 15cm Length Flat Cable
840826		14 Wires 15cm Length Flat Cable
840812		2 Wires 30cm Length Speakers Cable
840799		4 Wires 7.5cm Length Flat Cable
840768		4 Wires 10cm Length Flat Cable
840722		20 Wires 10cm Length Flat Cable
840708		4 Wires 80cm Length Cable
840689		12 Wires 10cm Length Cable
840662		34 Wires 45cm Length Flat Cable
840628		34 Wires 35cm Length Flat Cable
840582		34 Wires 40 Cm Length Flat Cable
840572		4 Wires 5cm Length Cable
840552		16 Wires 15cm Length Flat Cable
840211		9 Wires 45cm Length Flat Cable
840206		9 Wires 20cm Length Flat Cable
840204		9 Wires 15cm Length Flat Cable
840169		6 Wires 85cm Length Flat Cable
840165		6 Wires 65cm Length Flat Cable
770759		Speaker Cables Assembly (GPS2500)
770749		Speaker Cables Assembly (PS2500)
770750		Mains Cables Assembly (GPS2500)

Notes:

Each spare part is single quantity unless otherwise specified

Asterisk prefix explanation:

Omitted = First level spare part.

One asterisk = Second level, part of previous listed first level part.

Two asterisk = Third level, part of previous listed second level part.

Three asterisk =.....

Any request for not above mentioned part must encompass specific description including:

1) Model name,
2) Section,
3) Module code,
4) Reference name,
5) Quantity number.