ep·95 DIGITAL PIANO

HP 130 Digital Piano (Only for US market)

SERVICE NOTES

First Edition

Issued by RES

TABLE OF CONTENTS

	Page
SPECIFICATIONS	1
REAR VIEW	1
EXPLODED VIEW 1	2
EXPLODED VIEW 2	3
PARTS LIST	4
KEYBOARD PARTS LIST	5
PEDAL UNIT EXPLODED VIEW	5
STAND EXPLODED VIEW	6
BLOCK DIAGRAM	7
MAIN PCB ASSY & CIRCUIT DIAGRAM	8
CONTROL PCB ASSY & CIRCUIT DIAGRAM	9
POWER & AMP. PCB ASSY & CIRCUIT DIAGRAM	10
HEADPHONES PCB ASSY & CIRCUIT DIAGRAM	10
MAINS PCB ASSY & CIRCUIT DIAGRAM	10
RIGHT CONTACT PCB ASSY w/RUBBER CONTACT & CIRCUIT DIAGRAM	11
LEFT CONTACT PCB ASSY w/RUBBER CONTACT & CIRCUIT DIAGRAM	11
IDENTIFYING VERSION NUMBER	12
TEST MODE	12/13
AUDIO TEST	13
FACTORY SETUP	13

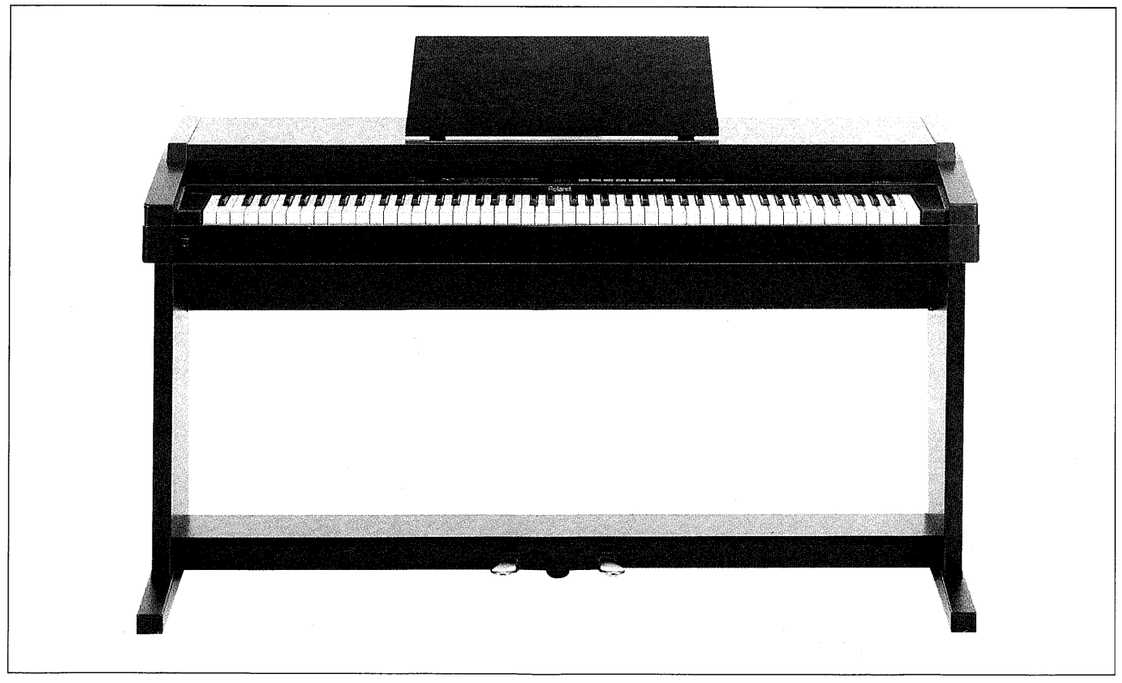

SPECIFICATIONS

-Keyboard	88 keys, velocity sensitive
-Polyiphony	28 voices
-Sounds	8 selectable via dedicated front-panel buttons (PIANO1, PIANO2, E.PIANO, VIBRAPHONE, HARPSICHORD, ORGAN, STRINGS, CHOIR), 241 Tones + 9 Drums Sets (selectable via MIDI)
-Digital effects	Digital Chorus, Digital Reverb
-Recorder	Records and plays back note and pedal data as well as tempo chan ges. 1 songs (±1000 notes)
-Tuning function	± 50 cents (TUNE knob)
-Controls	BRILLIANCE slider (brightness), VOLUME slider (global volume), Pianist VOLUME ▲/▼ buttons,Music Style selection buttons (Ballad, Pop, SI Swing, Swing, BossaN, Rock'N Shuffle, SI Rock, Latin, SI Waltz, Rag Time), METRONOME (on/off) button, INTRO/ENDING but ton, TEMPO/KEY TRANSPOSE ▲/▼ buttons, KEY START/STOP but ton, Recorder REC, PLAY/DEMO buttons, Tone selection buttons (Piano1, Piano2, E.Piano, Vibraphone, Harpsichord, Organ, Strings, Choir), CHORUS, REVERB buttons KEY TOUCH LIGHT/HEAVY but tons (Rear panel), TUNE knob.
-Finish	Simulated Rosewood
-Connectors	AC inlet, MIDI IN/OUT connectors, PEDAL(Damper/Soft) jack (ste reo), INPUT (L/Mono, R) jacks, OUTPUT (L/R) jacks, PHONES jack (front side).
-Speakers	16cm x2
-Output power	20 W x2
-Dimensions: Piano	1436 (W) x 456 (D) x 176 (H) mm
Stand	1436 (W) x 456 (D) x 638 (H) mm
Total	1436 (W) x 456 (D) x 814 (H) mm
-Weight	Piano: 32 Kg. Stand: 15,3 Kg.
-Power consumption	60W (117V) - 45W (230/240V)
-Supplied accessories	KS/135 stand (including pedals)
	Owner's. Manual (I/SP/DUTCH) EP85/95 (K6018264)
	Owner's. Manual (E/D/F) EP95/85 (K6018265)
	Owner's. Manual (E/SP/F) HP-130/EP85 (K6018278)
	MIDI Guide (K6018109)
	⚠ CABLE XVII-H03VVH2F-2X0.75-VII (13499149RI) 230V
	⚠ CABLE BS/13/H05VV-F3G 0.75-V (13499152RI) 230VE
	⚠ CABLE SAA/3-OA3CCFC 3X0.75-V (13499150RI) 240VA
	⚠ CABLE 49B/35JT 2X18 AWG-C17 (J3439128) 117V
-Options	Headphones: RH-120, RH-80, RH-20

REAR VIEW

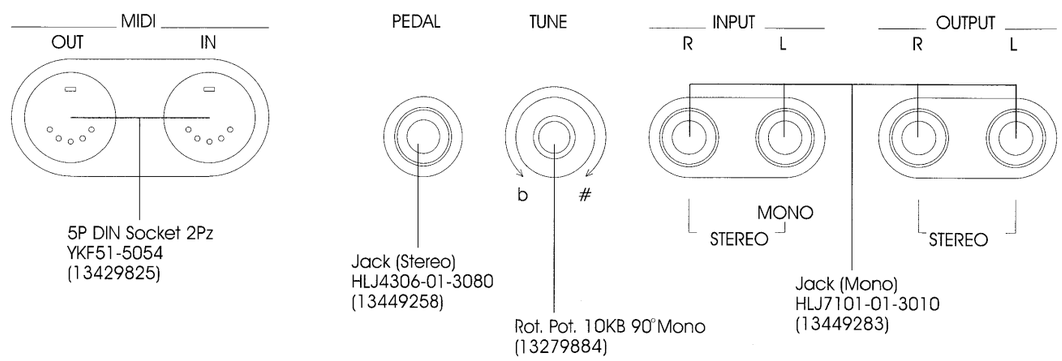

Copyright © 1997 by ROLAND CORPORATION

EXPLODED VIEW 1

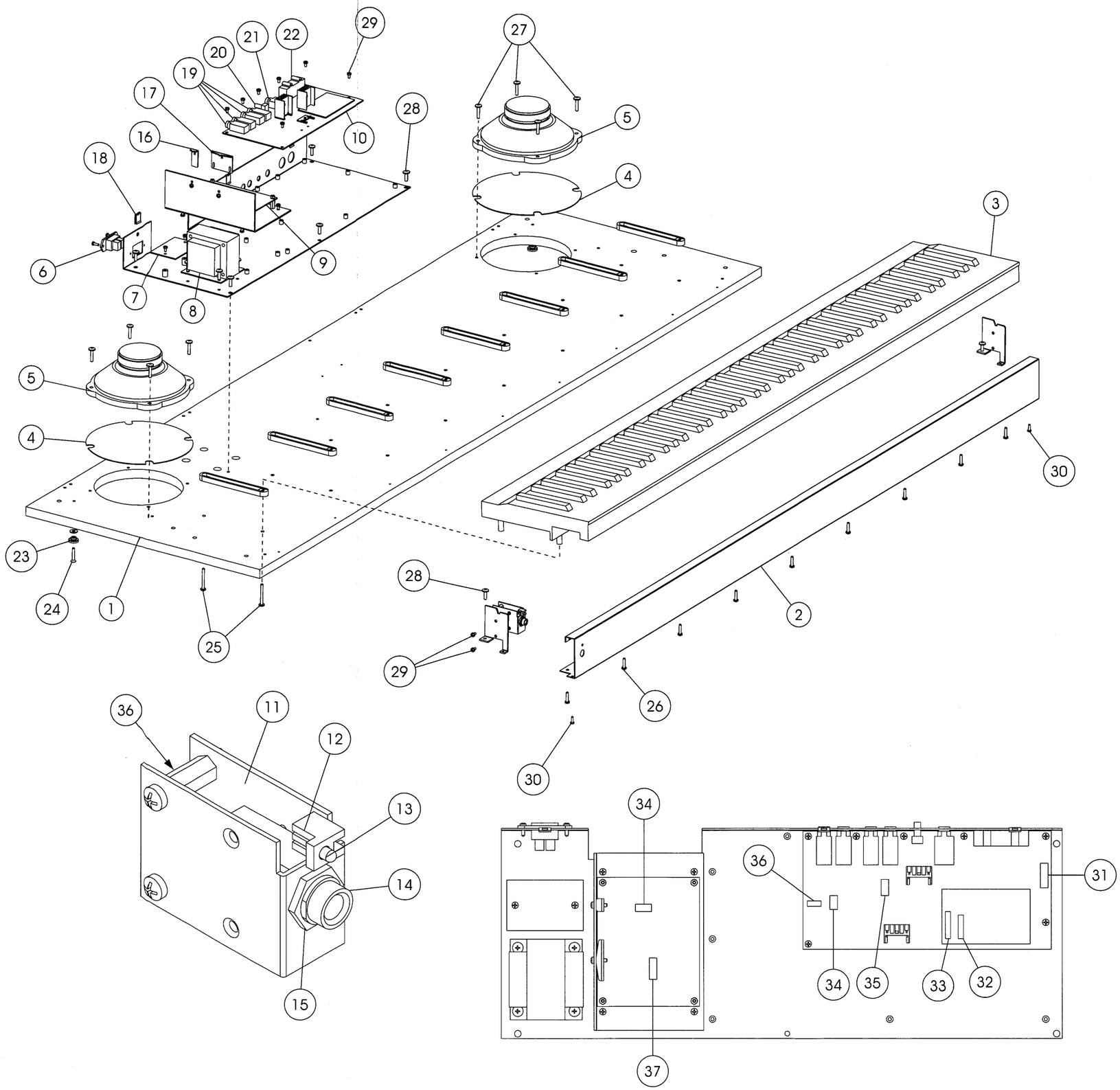

N.	PART No	PART NAME
1	7696312000	VARNISHED WOODEN BASE
2	7696310000	VARN+SILK. KEYBOARD BLIND
3	7698908000	88-KEY TP/8P KEYBOARD ASSY
4	7695813000	VARNISHED WOOFER NET
5	22415596	LOUDSPEAKER CF160138-01 6 OHM
6	13429722RI	AC INLET 8832.FSG.40.60
7	7696403000	MAINS PCB ASSY 230/240
8	K2458116	POWER TRANSFORMER 230/240
9	7696401000	POWER SUPPLY ASSY
10	7698901000	MAIN BOARD PCB ASSY
11	7696302000	HEADPHONES PCB ASSY
12	K2168110	SPACER FOR LED 90°
13	15029284RI	LED DIODE TLHR4401-RED
14	13449261	JACK SOCKET HLJ4306-01-3070
15	40016756	NUT M12 HLJ0999-01-360 M12
16	22195975	I.C. HOLDER 29x12x9
17	22205513	I.C. HOLDER 29x38x9
18	J2159103	DOUBLE ELASTIC PLATE
19	13449125	JACK SOCKET HLJ0520-01-110
20	13279884	ROT.POT. 10KB 90° MONO
21	13449258	JACK SOCKET HLJ4306-01-3080
22	13429825	5P DIN SOCKET 2PZ YKF51-5054
23	J2149103	STAND HINGE
24	J2289158	SCREW M4x20 TC TSP
25	J2289154	SCREW 3.5x35 TC PR TFR HEAD 8
26	J2289186	SCREW 3.5x16 TC PR TFR
27	J2289110	SELF LOCK.SCREW M4x20 TCTC
28	J2289109	SELF LOCK.SCREW M4x14 TCTC
29	J2289193	SELF LOCK.SCREW M3x6 TC TC
30	J2289102	SELF TAP.SCREW 2.9x10 TC TC
31	K3468151	16P FLAT CABLE (30) -2C
32	K3468152	20P FLAT CABLE (44) -2C
33	K3468153	20P FLAT CABLE (52) -2C
34	7695219001	5P CABLE (22) -2C
35	7698909000	2P COAXIAL CBL ASSY (48) -2C
36	7696407000	5-CBL ASSY (80) -2C P.2
37	7696408000	4P CBL ASSY (96/50)W(4PC)

EXPLODED VIEW 2

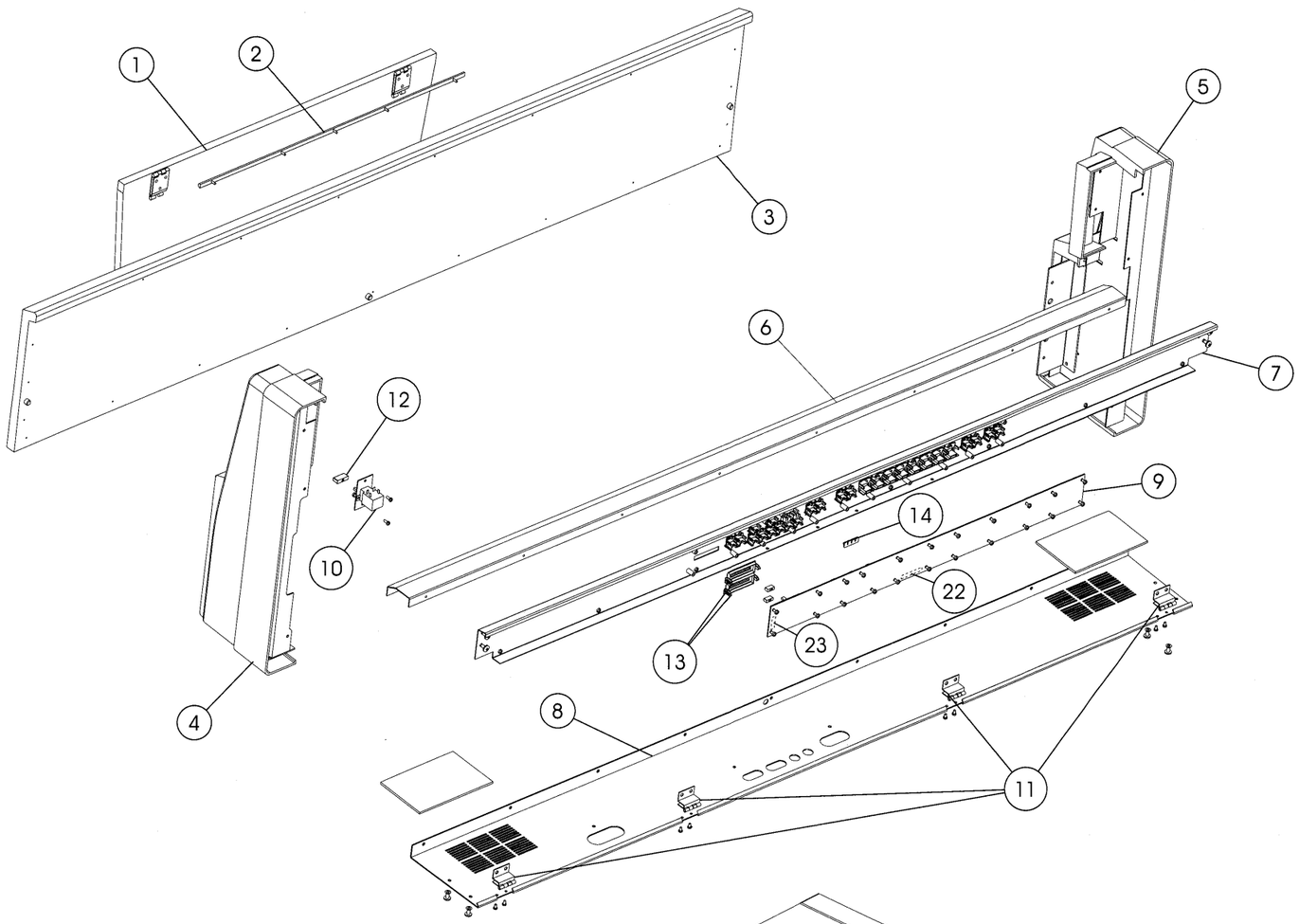

N.	PART No	PART NAME
1	K2218102	MUSIC REST W/HINGES
2	K2238108	MUSIC SCORE HOLDER
3	7696316000	TOP CABINET ASSY
4	K1158102	LEFT SIDE PANEL ASSY
5	K1158101	RIGHT SIDE PANEL ASSY
6	7696313000	VARNISHED BLIND
7	7698906000	VARN.+SILK. CONTROL BLIND (ONLY FOR EP-95)
	7699101000	VARN.+SILK. CONTROL BLIND (ONLY FOR HP-130)
8	7698304000	VARN.+SILK. REAR PANEL
9	7698902000	CONTROLS PCB ASSY EP-95/HP-130
10	13129124	SWITCH SDDG3078A
11	K2328102	IRON HINGE
12	32495597	SWITCH CAP
13	32225353	IS-ESCT SX1V BLK L=30
14	K2238104	4-LED LENS
15	22485192	BLACK KNOB W/WHITE INDICATOR
16	00900190	DOUBLE BUTTON (BLACK)
17	00900156	DOUBLE BUTTON + DIFFUSER (BLACK)
18	00900145	SINGLE BUTTON + DIFFUSER (BLACK)
19	01013023	SINGLE BUTTON + DIFFUSER (RED)
20	00903767	LARGE SINGLE BUTTON + DIFFUSER (BLACK)
21	00677212	4 BUTTON GROUP + DIFFUSER (GREY)
22	K3468151	16P FLAT CABLE (30) -2C
23	7698909000	2P COAXIAL CBL ASSY (48) -2C

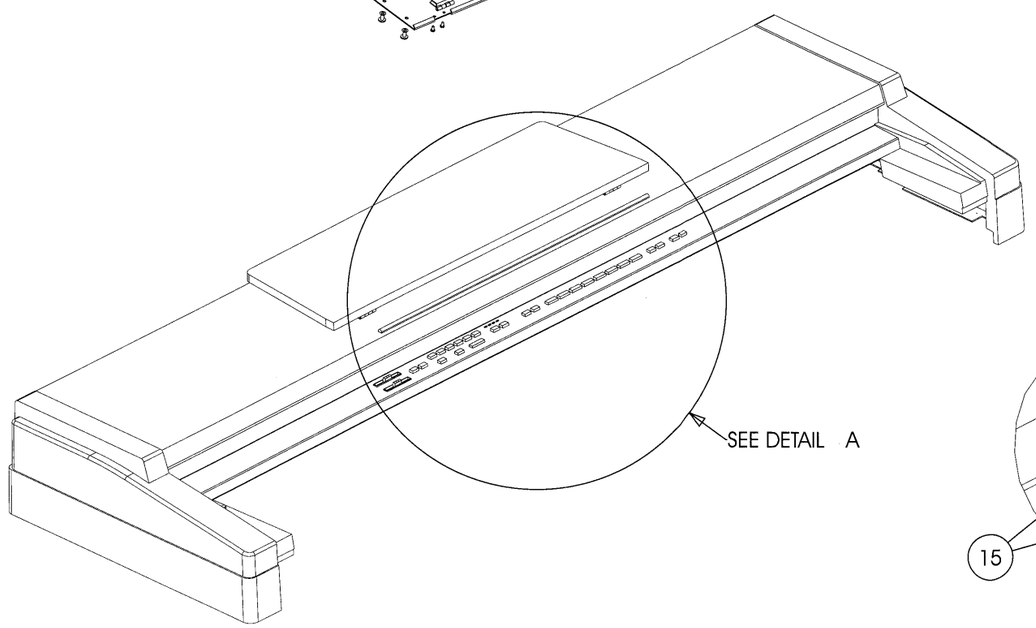

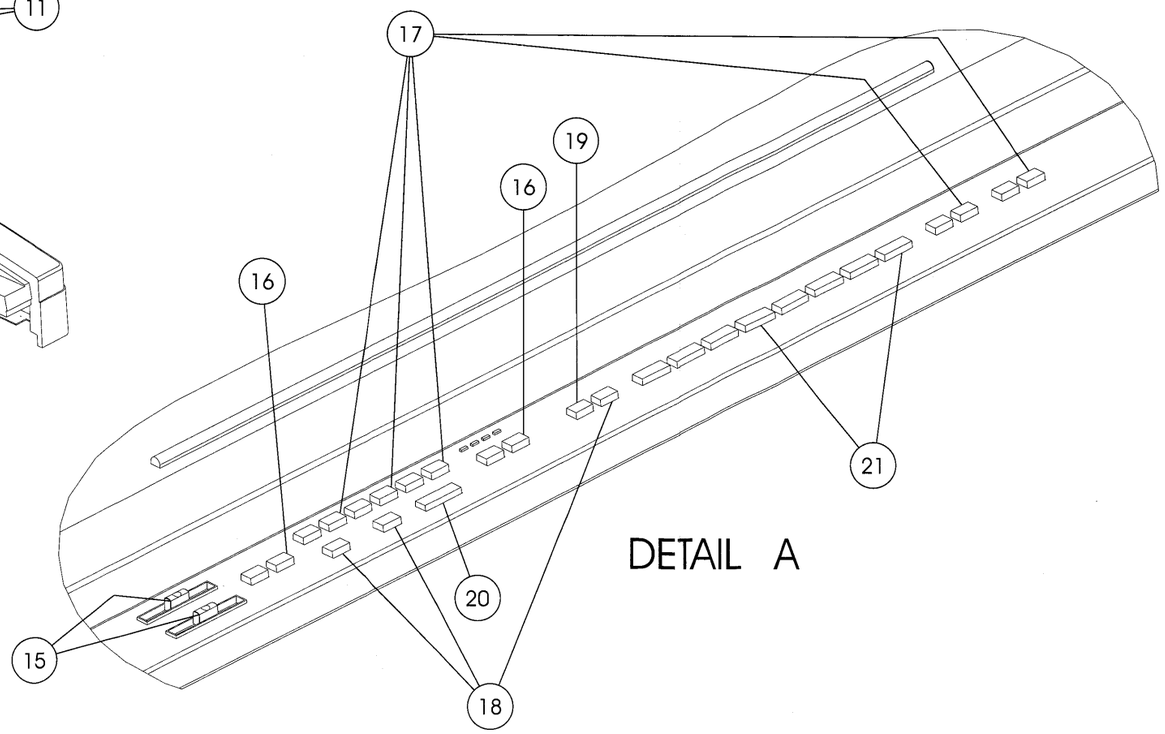

PARTS LIST EP-95 (117V/230V/230VE/240VA), HP-130 (117V)

SAFETY PRECAUTIONS :

The parts marked ⚠ have safety-related characteristics. Use only listed parts for replacement.

CONSIDERATION ON PARTS ORDERING

When ordering any parts listed in the parts list,please specify the following items in the order sheet.

	QTY	PART NUMBER	DESCRIPTION	MODEL NUMBER
Ex.	10	22575241	Sharp Key	C-20/50
	15	2247017300	Knob (orange)	DAC-15D

Failure to completely fill the above items with correct number and description will result in delayed or even undelivered replacement.

NOTE : *The parts marked "#" are new (Initial Parts).*
The parts marked ⚠ have Safety - Related characteristics.
Use only listed parts for replacement.

<< EMI >> *: Component for EMC.*

RCB = Right Contact Board **PHB** = Phones Board
LCB = Left Contact Board **PAB** = Power & Amp.Board
CB = Control Board **MB** = Main Board
PMB = Piano Module Board (no service)

CASING

	7696316000	TOP CABINET ASSY	
	7698304000	VARN+SILK. REAR PANEL	
#	7698906000	VARN+SILK. CONTROL BLIND	(only for EP-95)
#	7699101000	VARN+SILK. CONTROL BLIND	(only for HP-130)
	7696313000	VARNISHED BLIND	
	7696310000	VARN+SILK. KEYBOARD BLIND	
	7696312000	VARNISHED WOODEN BASE	
	K2218102	MUSIC REST W/HINGES	
	7695813000	VARNISHED WOOFER NET	
	K2238108	MUSIC SCORE HOLDER	
	K1158101	RIGHT SIDE PANEL ASSY	
	K1158102	LEFT SIDE PANEL ASSY	

CHASSIS

K2328102	IRON HINGE	
22195975	I.C. HOLDER 29X12X9	
22205513	I.C. HOLDER 29X38X9	
J2149103	STAND HINGE	

KNOB BUTTON

00900190	DOUBLE BUTTON	(BLACK)
00900156	DOUBLE BUTTON+DIFF.	(BLACK)
01013023	SINGLE BUTTON+DIFFUSER	(RED)
00900145	SINGLE BUTTON+DIFFUSER	BLACK)
00903767	LARGE SINGLE BUTTON+BLACK DIFF.	
00677212	4 BUTTON GROUP+DIFF.	(GREY)
32495597	SWITCH CAPS	
22485192	BLACK KNOB W/WHITE INDICATOR	

SWITCH

	1312975301	SWITCH EVQ-QSB 05K GR.160	All on CB
⚠	13129124	SWITCH SDDG3078A	

JACK, SOCKET

13449125	JACK SOCKET HLJ0520-01-110	JK3,4,10,11 on MB
13449261	JACK SOCKET HL34306-01-3070	JK1 on PH.B
13449258	JACK SOCKET HLJ4306-01-3080	JK6 on MB
13429825	5P DIN SOCKET 2PZ YKF51-5054	JK7 on MB

SPEAKER

22415596	LOUDSPEAKER CF160138-01 6 OHM

KEYBOARD

#	7698908000	88-KEY TP8P KEYBOARD ASSY

NOTE:For details, refer to "KEYBOARD PARTS LIST" (Pag.5)

PCB ASSY

	7696401000	POWER SUPPLY ASSY	
	7696302000	HEADPHONES PCB ASSY	
	7696404000	MAINS PCB ASSY	(117V)
	7696403000	MAINS PCB ASSY	(230/240V)
#	7698902000	CONTROLS PCB ASSY	HP-130/EP-95
[E] #	7698901000	MAIN BOARD PCB ASSY	HP130/EP95
#	7698903000	RIGHT CONTACT PCB ASSY W/RUBBER	
#	7698904000	LEFT CONTACT PCB ASSY W/RUBBER	

IC

	15229718RI	I.C. 6N 137	PHOTO-COUPLER	IC22 on MB
#	K525813210	I.C. K525813210	MASK ROM	IC6 on PMB
#	K525813010	I.C. K525813010	MASK ROM	IC7 on PMB
#	K525813410	I.C. HD6435328RW21F	FLAT	IC3 on PMB
	15169550RI	I.C. 74 HC138	DIP CMOS	IC3 on CB
	15259886	I.C. 74 HCU 04	CMOS SMD	IC1 on PMB
	00129278	I.C. SSC1080 FOB	(CUSTOM IC)	IC11 on PMB
	J5259110	I.C. HM62256LFP-7T	FLAT SRAM	IC2 IC8 on PMB
	15239229	I.C. TC6116-GP4	(CUSTOM IC)	IC4 on PMB
	15259884	I.C. TC7S08F MOS	CMOS	IC5 on PMB
	15259883	I.C. TC75S00F TE85L	CMOS	IC12 on PMB
	15259887	I.C. TC7SU04F	FLAT CMOS	IC13 on PMB
	15269214	I.C. 74LS05	FLAT TTL	IC24 on MB
	15199559RI	I.C. TD 62506P	(INTERF.DRIVER IC)	IC1 on CB
	15199560RI	I.C. TD62305AP	(INTERF.DRIVER IC)	IC2 on CB
	15289710	I.C. UPD 63200GS	DAC	IC23 on MB
	15289105	I.C. UPC 4570G	(OP AMP)	IC13,14,15,16 on MB
	15289109	I.C. M5216FP	OP AMP	IC17 on MB
	15199933	I.C. M51953 BL VERT.	(RESET IC)	IC1 on PAB
	J5199102	I.C. UA 7812	CV REGUL.(+12V)	IC20 on MB
	15199155	I.C. L78MR05R	REGUL(+5V)&RESET	IC21 on MB
	1519957701	I.C. LM 1875 T		IC2, IC3 on PAB

TRANSISTOR

15119155RI	TRANSISTOR	BC/560-B	Q1 on CB
15129114	TRANSISTOR	2SC-1815GR	Q1, 2 on PAB
15319101	TRANSISTOR	2SC-2412	Q9,Q10 on MB
15309101	TRANSISTOR	2SA-1037KR	Q11 on MB
15319603	TRANSISTOR	2SD-1664R	Q6,Q1 on MB
15329102	TRANSISTOR	2SK-209GR	Q4,Q5 on MB
15329516	TRANSISTOR	DTC-114EK	Q7 on MB

DIODE

15019159RI	DIODE	1N-4148	All on CB / All on RCB / All on LCB
15339112	CHIP DIODE	DA119	D8, 9, 10, 11, 12 on MB
15339108	DIODE	DA-204K	D2, 3, 4, 5, 6, 7 on MB
15339114	DIODE	RB420D T146	D1 on PAB
15029320RI	LED DIODE	TLHG4401-GREEN	All on CB
15029284RI	LED DIODE	TLHR4401-RED	All on CB / D1 on PH.B.
15019345RI	ZENER DIODE	BZX79C 5.6V	D3 on PAB
J5019109	DIODE	1N 4003	D2, 4 on PAB
15019290	DIODE	DBA40C-K15 2.6/200	D1 on MB
15039107	DIODE	DBF-40C 4A	D1 on PAB

RESISTOR

15399917	CHIP RES.	ARRAY 4X 10K E/U	RA8 on PMB
15399932	CHIP RES.	ARRAY 4X100 E/U	RA4 on PMB
J3919104	CHIP RES.	ARRAY 2512 8X10 K +2C	RA1 / RA7 on PMB
13819132RI	UNINFL.RES.	100 OHM 0.6W 5%	R2, 3, 4, 5 on CB
13819131RI	UNINFL.RES.	10 OHM 0.6W 5%	R1 on CB
J3809129	UNINFL. RES.	220 OHM 0.6W 5%	R10, 12 on PAB

POTENTIOMETER

13279884	ROT.POT.	10KB 90ø MONO	VR1 on MB
13359364	SLIDER POT.	NNB-X10-B14	VR1 on CB
J3339104	SLIDER POT.	NNB-X10-B15	VR2 on CB

CAPACITOR

13529147RI	CAPAC.ARRAY	8X100 PF	CA1 on MB
J3629144	ELCTRL.COND.	470UF 16V AX	C4 on MB
13649668RI	ELECTRL.COND.-H	47UF 25V AX	C5 on MB
13639167RI	ELECTRL.COND.-V	22UF 25V	C7,11 on PAB
13649662RI	ELECTRL.COND.-V	3300UF 25V	C4 on MB
J3629103	ELECTRL.COND.	100U 25V P5	C6,11,13,15,17,19,55,58,119,178, C179,184 on MB
J3629120	ELECTR.COND.	3300UF 35V R.	C16,17 on PAB
J3629135	ELECTRL. COND.	470U 35V P5	C113 on MB
13639206RI	ELECTRL.COND.-V	10UF 50V	C3,4,9,10,14,20 on PAB
J3629104	ELECTRL.COND.	10U 50V P5	C16, 23, 27, 30, 33, 37, 38, 46, 50, 51, 56, 62, 64, 65,166,168,177 on MB / C7on CB
J3629118	ELECTRL.COND.-V	2.2UF 100V	C2, 8 on PAB
J3629107	ELECTRL.COND.	1UF 100V P5	C116 on MB
J5369101	ELECTR. COND.	22U 16V (SMD)	C12,13,14,15,55 on PMB
13529104RI	SPEC.COND.	DE7150F472M	C1 on MAINS B.
13659306	SPEC. COND.	0.047F 5.5V RAD.	C57 on PAB

INDUCTOR, COIL, FILTER

<<EMI>>	12449358	NOISE SUP.	FL5R200N PNT	L4,5,6,7,17 on MB / L1,2,3 on PH.B.
<<EMI>>	12449370	NOISE SUP.	SBT-0160W	L13,14,15 on MB
<<EMI>>	12449392	NOISE SUP.	SNT-D30	L2 on MB
<<EMI>>	12449326	NOISE SUP.	SBT-0460	L12 on MB
<<EMI>>	13529187	NOISE SUP.	ELKTR391CA	FL3, 4, 5, 6 on MB
<<EMI>>	12449380	NOISE SUP.	EXC-ELDR25V	FL2 on MB

CRYSTAL, RESONATOR

15299180	QUARTZ	24 MHZ	X1 on PMB

RELAY

12439238	RELAY	JW2AHN-12	K1 on PAB

FUSE, FUSE HOLDER

⚠	J2559101	FUSE 5X20 T 500 MA S UR	F2 on MB
⚠	J2559107	FUSE 5X20 T 800 MA-S UR	FI on MAINS B.(230V/240V)
⚠	J2559105	FUSE 5X20 T 5 A S UR	F3, F4 on PAB
⚠	12559753	FUSE RESISTOR 27 OHM 2W	R1 on MB
⚠	J2559112	FUSE 5X20 T 1.25 A UL CSA	FI on MAINS B (117V)
	12199597RI	FUSE HOLDER T.P1	

CONNECTOR

13419677RI	16P FEM. CONN. AMP	1.27	CN9 on MB / CN1 onCB
13369689RI	20P FEM. CONN. AMP	1.27	CN2,CN3 on P.M.B, CN1 on RCB, CN1 oN LCB
13369688RI	4P MALE CONN.	P 2.5 M	CN2 on PAB
J3439103	6P MALE CONN.	P 2.5 M	CN2 on MB
J3439109	5P MALE CONN.	P 2.5 M	CN8 on MB, CN3 on PAB
J3439117	6P MALE CONN. 90ø	P. 2.5	CN2 on CB
J3439120	4P MALE CONN.	P.2 M	CN2 on RCB, CN2 on LCB
J3439125	5P MALE CONN.	P.2 M	CN1 on MB, CN1 on PH.B
13439611RI	3P SCREW CLAMP	P10	CT1 on MB, CN2,3, 4 on MAINS B.
J3459104	3P SCREW CLAMP	P.5	CN3 on PAB

WIRING, CABLE

	K3468151	16P FLAT CABLE	(30)	2C		CN9 on MB to CN1 on CB
	K3468152	20P FLAT CABLE	(44)	2C		CN3 on PMB to CN1 on RCB
	K3468153	20P FLAT CABLE	(52)	2C		CN2 on PMB to CN1 on LCB
	7695219001	5P CABLE	(22)	2C		CN8 on MB to CN1 on PAB
#	7698909000	2P COAXIAL CBL ASSY	(48)	2C		CN2 on MB to CN2 on CB
	7696407000	5-CBL ASSY	(80)	2C	P.2	CN1 on MB to CN2 on PHB
	7696408000	4P CBL ASSY	(96/50)	W(4PC)		CN2 on PAB to Speaker
#	7698907000	4P CABLE ASSY	(6)	2C	P.2	CN2 on RCB to CN2 on LCB

TRANSFORMER

⚠	K2458116	POWER TRANSFORMER	230V/240V
⚠	K2458127	POWER TRANSFORMER	117V

AC INLET

⚠	13429722RI	AC INLET 8832.FSG.40.60	230V
⚠	13429721RI	AC INLET 6100-33	230VE, 240VA
⚠	J3439127RI	AC INLET 6102-33	117V

SCREW

J2289121	SELF TAP. SCR.	2.2X10 C.C
J2289101	SELF TAP.SCREW	2.9X 6 TC TC
J2289102	SELF TAP.SCREW	2.9X10 TC TC
J2289116	SELF TAP.SCREW	3.5X13 TC TC
J2289126	SELF TAP.SCREW	2.9X 8 TCTCPRBZ
J2289130	SCREW	2.9X13 TC TC PR TROP
J2289108	SELF LOCK.SCREW	M3X10 TCTC H.6
J2289147	SELF LOCK.SCREW	M3X12 TCTC H.6
J2289109	SELF LOCK.SCREW	M4X14 TCTC H. 9.5
J2289110	SELF LOCK.SCREW	M4X20 TCTC H. 9.5
J2289193	SELF LOCK.SCREW	M3X6 TC TC H.6
J2289158	SCREW	M4X20 TC TSP
J2289115	SELF TAP.SCREW	3.5X9.5 TCPRTFR H.8
J2289154	SCREW	3.5X35 TC PR TFR HEAD 8
J2289155	SCREW	4X12 TC PR TFR HEAD 9
J2289156	SCREW	4.2X11 TC PE TFR HEAD 9.5
J2289186	SCREW	3.5X16 TC PR TFR H.8
40016756	NUT	M12 HLJ0999-01-360 M12
J2289113	NUT	3MA H.3
J2139111	FLAT WASHER	I/D 3X7 TH. 0.6
J2139114	FLAT WASHER	I/D 5X12 TH. 1

PACKING

	K2638150	RIGHT POLYST. END-SIDE	
	K2638151	LEFT POLYST. END-SIDE	
	K2678116	CARTENE ENVELOPE	HD 70X190
#	K2618177	OUTER PACKING	EP-95
#	K2618182	OUTER PACKING	HP-130

MISCELLANEOUS

32225353	IS-ESCT SX 1V BLK L=30	
J2139119	MYLAR WASHER	E.D.8 I.D.4
J2139102	TOOTHED WASHER	I/D 3
K2168102	SPACER FOR LED	H.2.8 D.E. 5.5
K2168110	SPACER FOR LED 90ø	
J2159103	DOUBLE ELASTIC PLATE	
K2268122	RED FELT	1250X14X1.5 MM.
K3468138	COPPER STRIP	0.2X20X70 MM. 2H.
K2248129	ANTIDUST COVER	PL30N
K2248122	ANTIDUST COVER	MM 135x85x3
K2168112	LED SPACER	H. 4.5 MAX 9 MM
K2238104	4-LED LENS	

ACCESSORIES

⚠	J3439128	CABLE 49B/35JT 2X18 AWG-C17	117V
⚠	13499149RI	CABLE XVII-H03VVH2F-2X0.75-VII	230V
⚠	13499152RI	CABLE BS/13/H05VV-F3G 0.75-V	230VE
⚠	13499150RI	CABLE SAA/3-OA3CCFC 3X0.75-V	240VA
	K6018109	MIDI GUIDE	
#	K6018264	O. MANUAL (I/SP/DUTCH)	EP85/95
#	K6018265	OWNER'S MANUAL (E/D/F)	EP85/95
#	K6018278	OWNER'S MANUAL (E/SP/F)	(only for HP-130)

STAND KS-95/135 or KS-135 PARTS LIST

	K3418103	CABLE FOR PEDAL (230)
	J2289109	SELF LOCK.SCREW M4X14 TCTC H. 9.5
	40017712	SCREW M6X60 TC BR HEAD 17
	K2288102	SCREW M4X27 TC HEAD 11
	J2289155	SCREW 4X12 TC PR TFR HEAD 9
	22365715	ADHESIVE CBL HOLDER
	J2289151	BLACK KNOB M6X14
	J2329101	SCREW DRIVER TYPE 2
	K2128115	SUPPORT FOR INSTRUMENT HOLDER
	K2128116	SUPPORT F/REAR CROSS-BAR
	K2358102	SIDE PANEL FOOT
	J3059112	2-NOTE PEDAL (GOLD YELLOW)

NOTE :Refer to the page of "PEDAL UNIT EXPLODED VIEW" (Pg.5) for details.

	K1138102	BASE F/PEDAL
	K2638140	RIGHT POLYST. END-SIDE
	K2638141	LEFT POLYST. END-SIDE
	K2638142	MID POLYST. END-SIDE
	K2638143	POLYST. SHEET 500X1510 MM TH. 20
	K2678115	CARTENE ENVELOPE HD 60X80
	K2678109	CARTENE ENVELOPE HD 150X40
	K2678102	POLYETH. ENVELOPE 25X45
#	K2618172	OUTER PACKING KS-135
#	K6018270	MOUNTING SCHEME KS-95/135

KEYBOARD PARTS LIST
88 KEY TP8 KEYBOARD ASSY

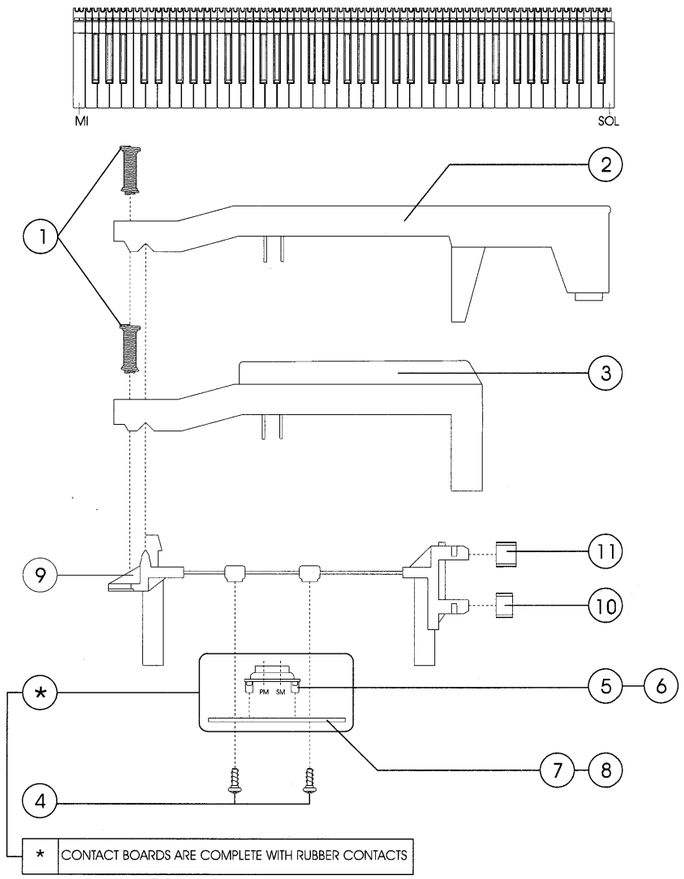

Ref	PARTS NAME	PARTS NUMBER	n.
1	KEY SPRING gr.63	J2179102	88
2	NATURAL KEY A (gr.10) TP/8P LA(I)	J2579141	1
	NATURAL KEY C (gr.10) TP/8P DO	J2579142	7
	NATURAL KEY D (gr.10) TP/8P RE	J2579143	7
	NATURAL KEY E (gr.10) TP/8P MI	J2579144	7
	NATURAL KEY F (gr.10) TP/8P FA	J2579145	7
	NATURAL KEY G (gr.10) TP/8P SOL	J2579146	7
	NATURAL KEY A (gr.10) TP/8P LA	J2579147	7
	NATURAL KEY B (gr.10) TP/8P SI	J2579148	8
	NATURAL KEY A (gr.10) TP/8P DO	J2579149	1
3	SHARP KEY (gr.10) TP/8P	J2579150	36
4	SELF TAP SCREW 2.9x8 TCTCPRBZ	J2289126	48
5	12P RUBBER CONTACT	22185238	1
6	13P RUBBER CONTACT	22185239	7
7	LEFT CONTACT PCB ASSY+RUBBER	7698904000	1
8	RIGHT CONTACT PCB ASSY+RUBBER	7698903000	1
9	88-KEY KEYBOARD CHASSIS TP/8P	J2819104	1
10	GUIDE BUSHING INFERIOR	J2359104	88
11	GUIDE BUSHING SUPERIOR	22158789	88
*	CONTACT BOARDS ARE COMPLETE WITH RUBBER CONTACTS		

PEDAL UNIT EXPLODED VIEW (2 NOTE PEDAL)
ASSY J3059112

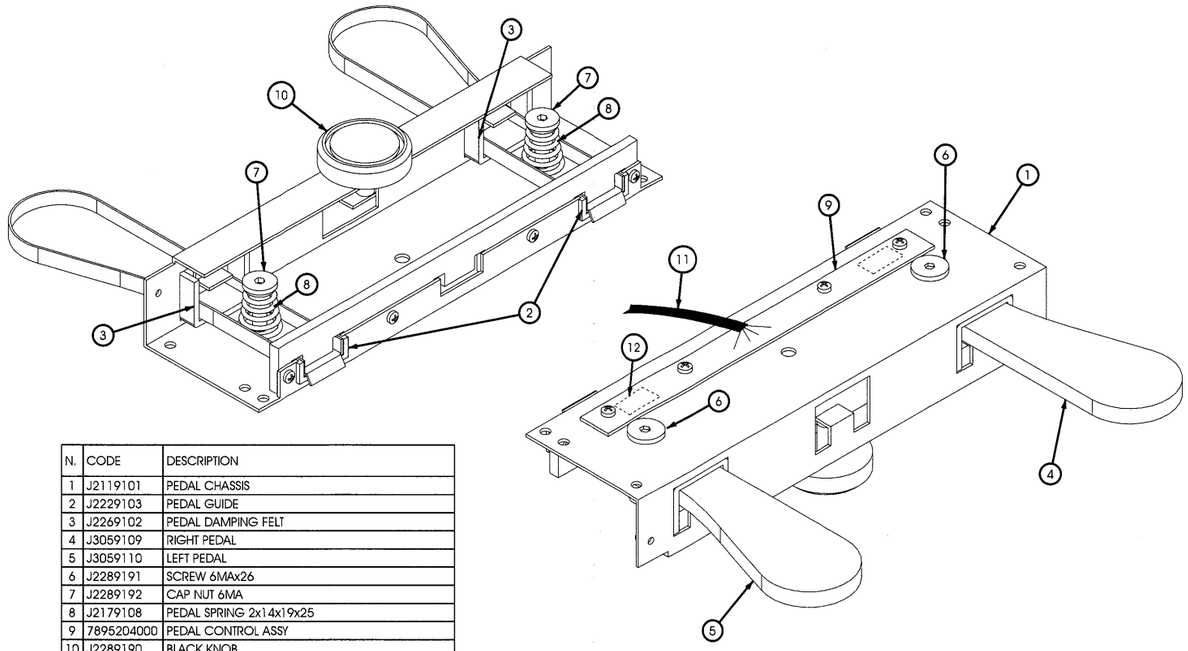

N.	CODE	DESCRIPTION
1	J2119101	PEDAL CHASSIS
2	J2229103	PEDAL GUIDE
3	J2269102	PEDAL DAMPING FELT
4	J3059109	RIGHT PEDAL
5	J3059110	LEFT PEDAL
6	J2289191	SCREW 6MAx26
7	J2289192	CAP NUT 6MA
8	J2179108	PEDAL SPRING 2x14x19x25
9	7895204000	PEDAL CONTROL ASSY
10	J2289190	BLACK KNOB
11	K3418103	CABLE FOR PEDAL (230)
12	00345290	SWITCH-SSCUANP

CIRCUIT DIAGRAM 2 NOTE PEDAL

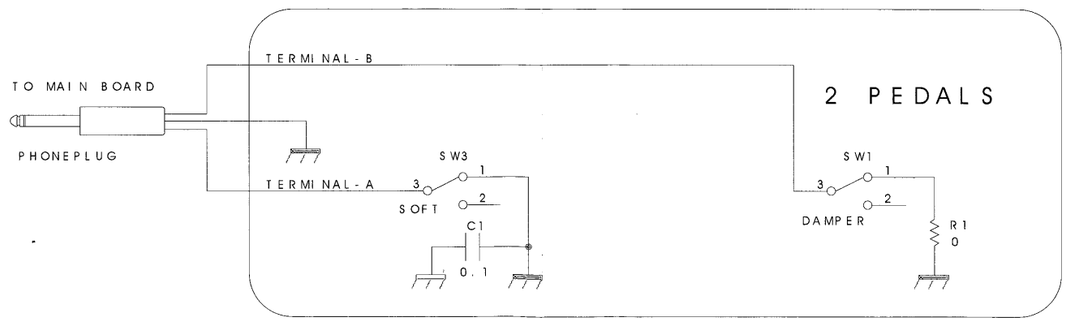

STAND EXPLODED VIEW KS-95/135 or KS-135

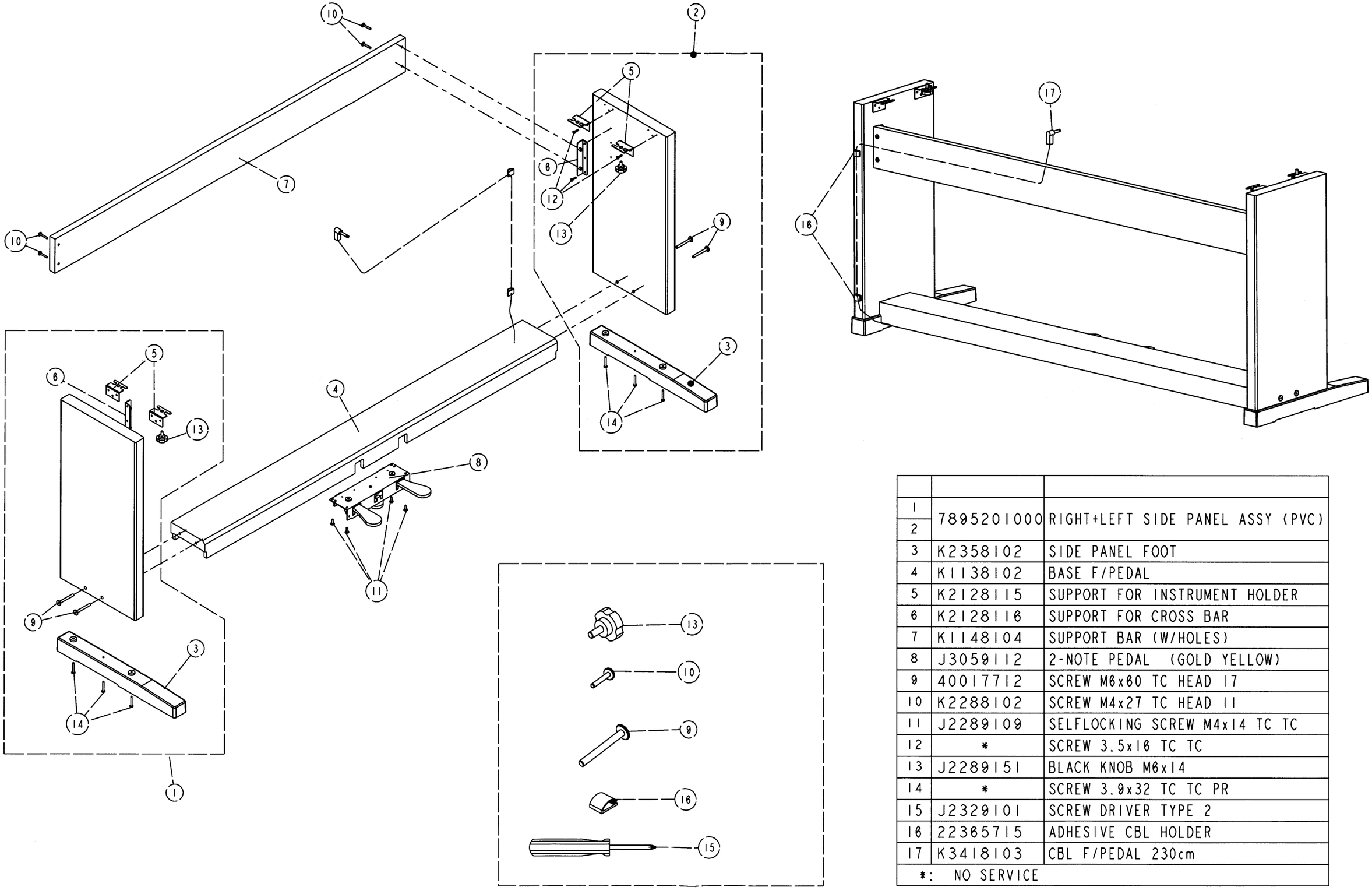

1	7895201000	RIGHT+LEFT SIDE PANEL ASSY (PVC)
2		
3	K2358102	SIDE PANEL FOOT
4	K1138102	BASE F/PEDAL
5	K2128115	SUPPORT FOR INSTRUMENT HOLDER
6	K2128116	SUPPORT FOR CROSS BAR
7	K1148104	SUPPORT BAR (W/HOLES)
8	J3059112	2-NOTE PEDAL (GOLD YELLOW)
9	40017712	SCREW M6x60 TC HEAD 17
10	K2288102	SCREW M4x27 TC HEAD 11
11	J2289109	SELFLOCKING SCREW M4x14 TC TC
12	*	SCREW 3.5x16 TC TC
13	J2289151	BLACK KNOB M6x14
14	*	SCREW 3.9x32 TC TC PR
15	J2329101	SCREW DRIVER TYPE 2
16	22365715	ADHESIVE CBL HOLDER
17	K3418103	CBL F/PEDAL 230cm
*: NO SERVICE		

BLOCK DIAGRAM

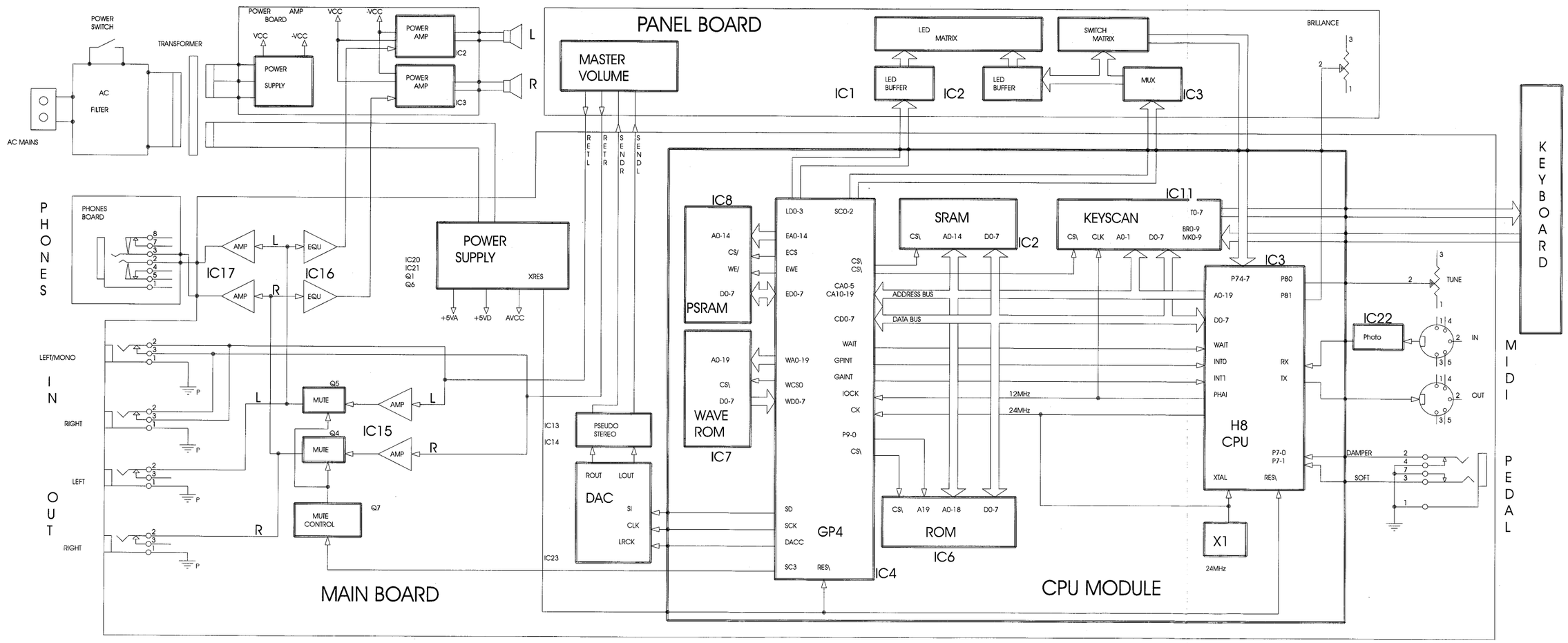

MAIN PCB ASSY & CIRCUIT DIAGRAM ASSY 7698901000

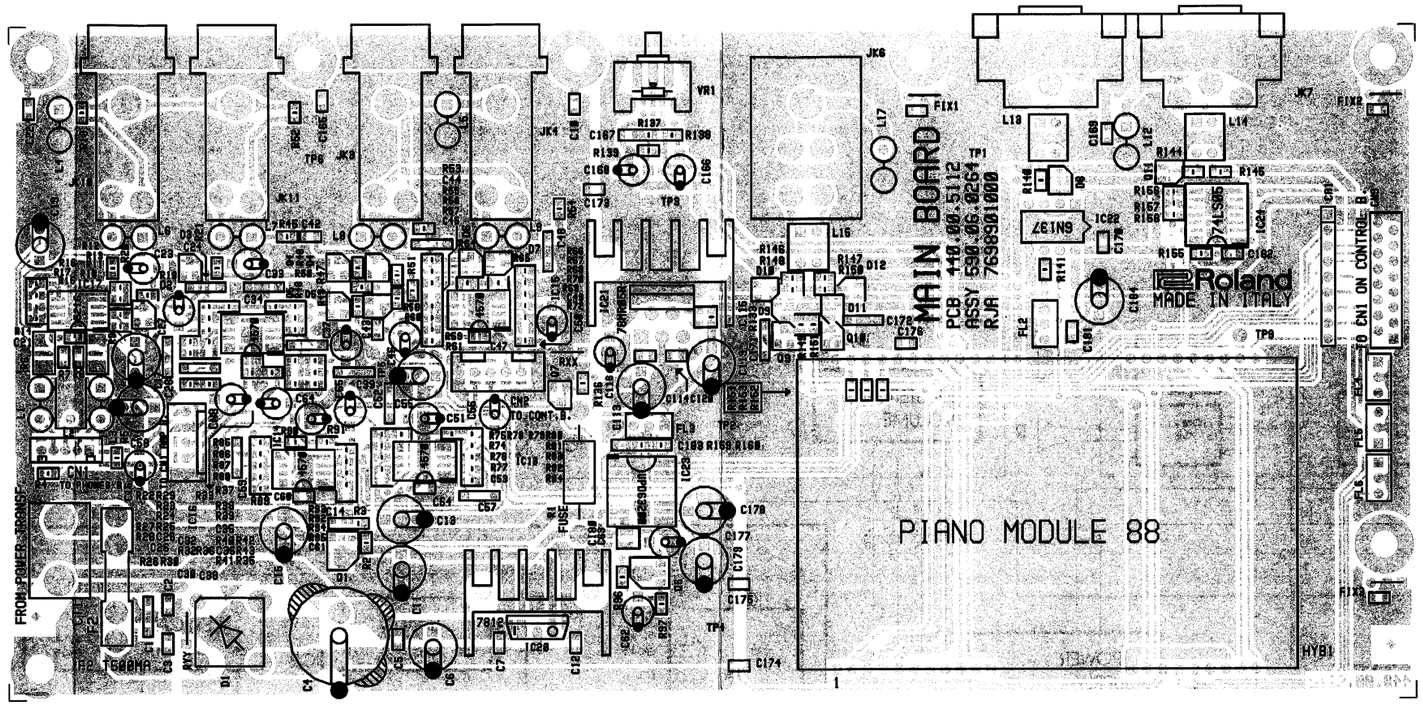

View from component side

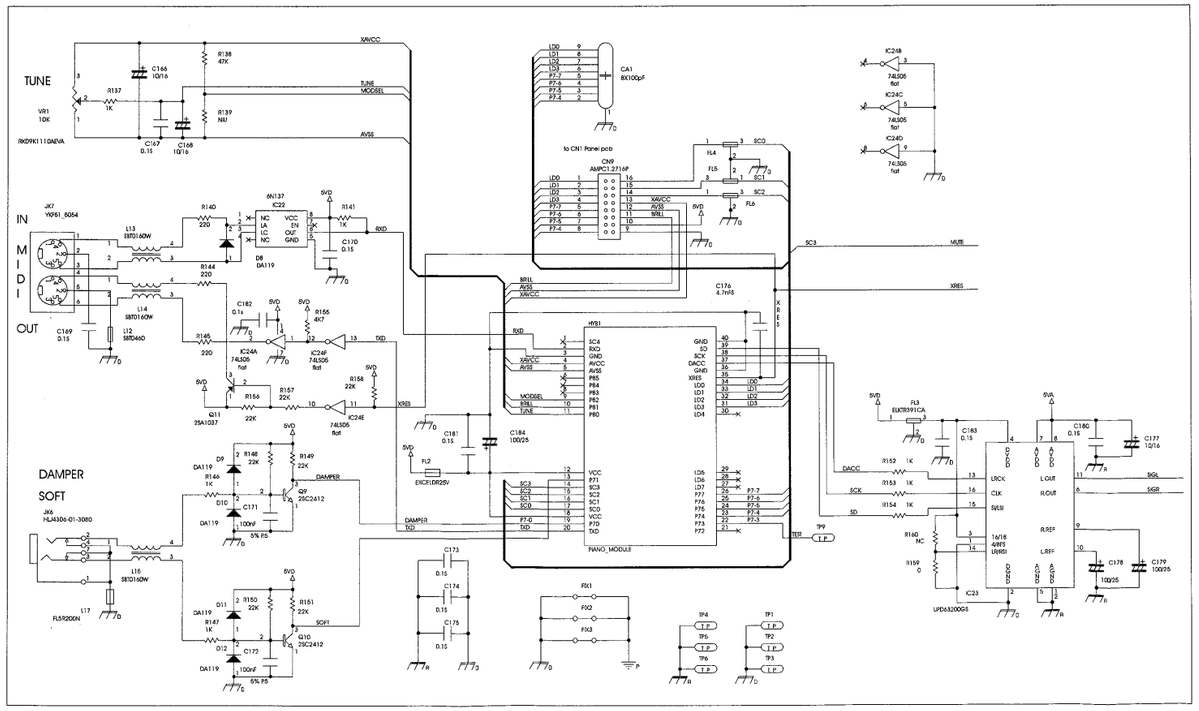

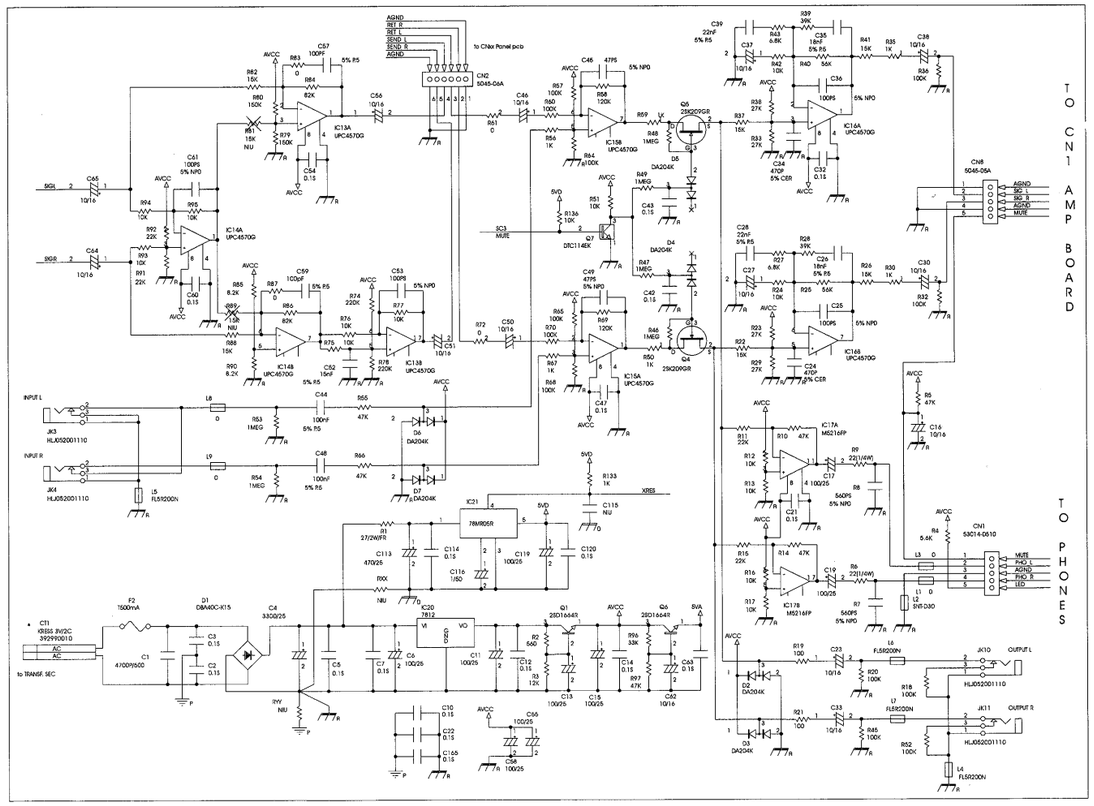

PIANO MODULE (no service)

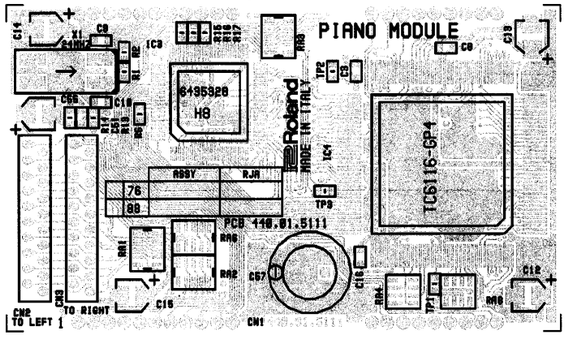

View from component side

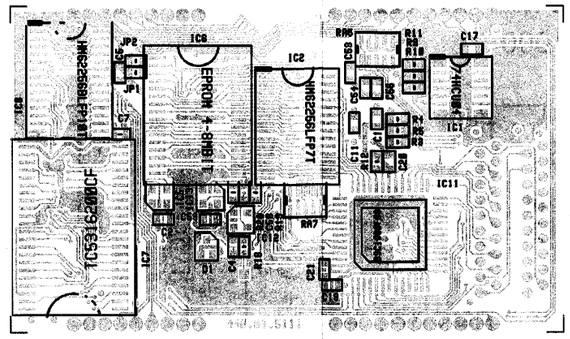

View from solder side

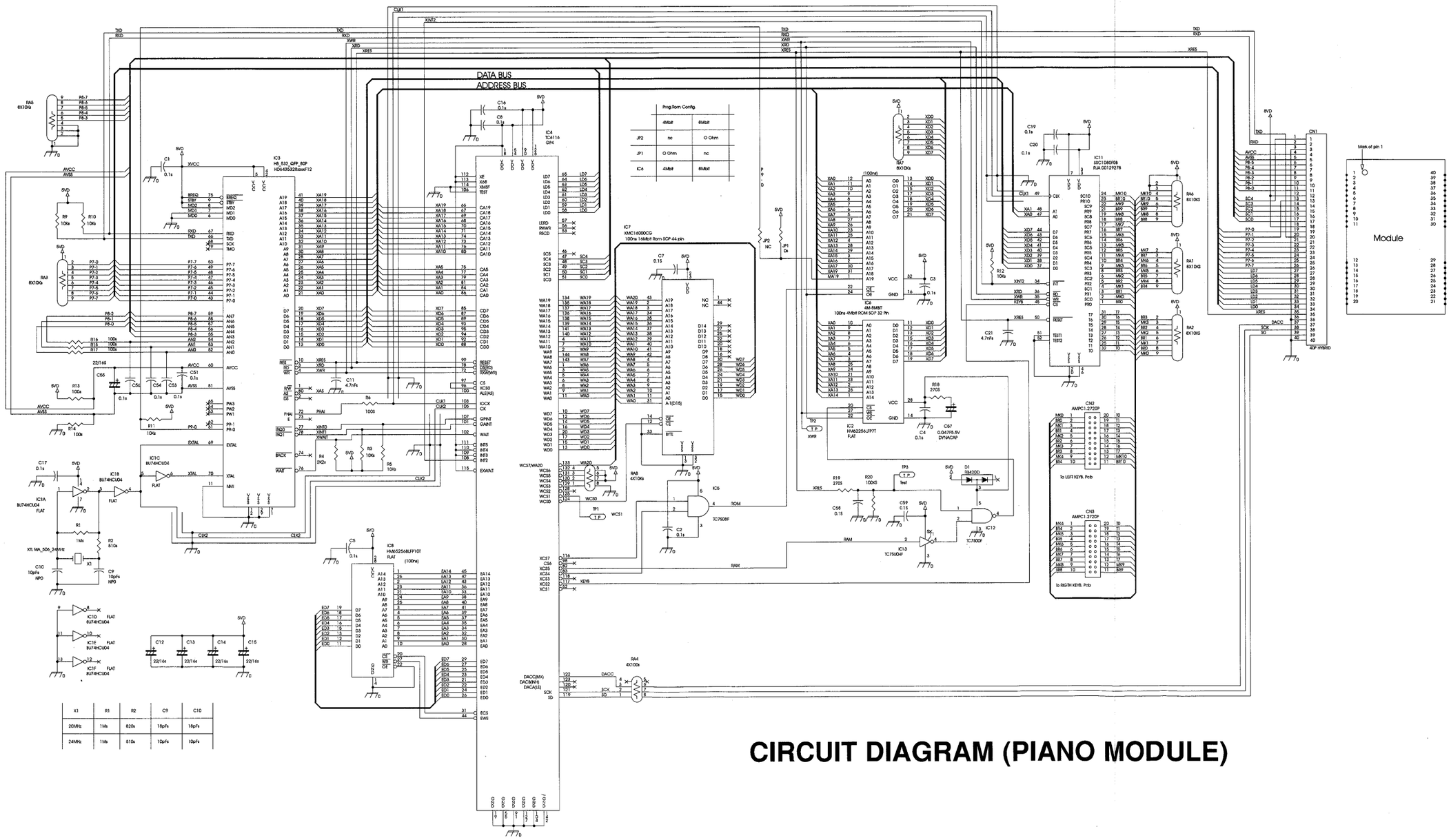

X1	R1	R2	C9	C10
20MHz	1Ms	820k	18pFs	18pFs
24MHz	1Ms	510k	10pFs	10pFs

CIRCUIT DIAGRAM (PIANO MODULE)

POWER & AMPLIFIER PCB ASSY & CIRCUIT DIAGRAM

ASSY 7696401000

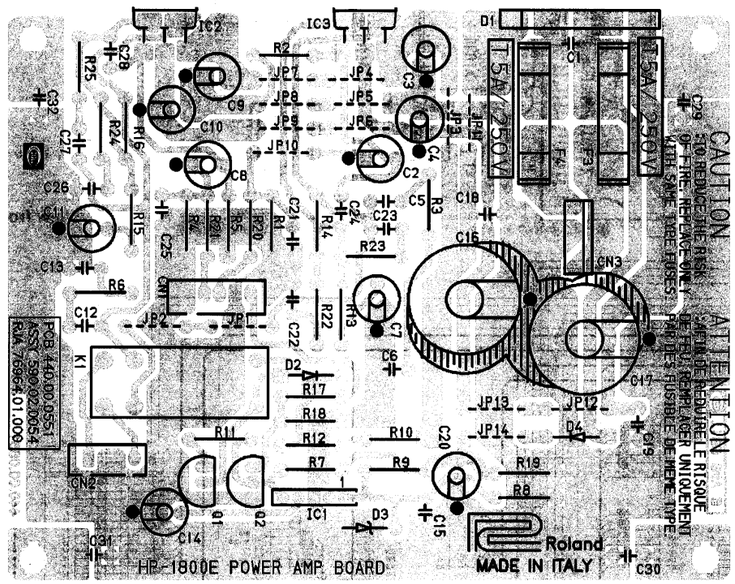

View from component side

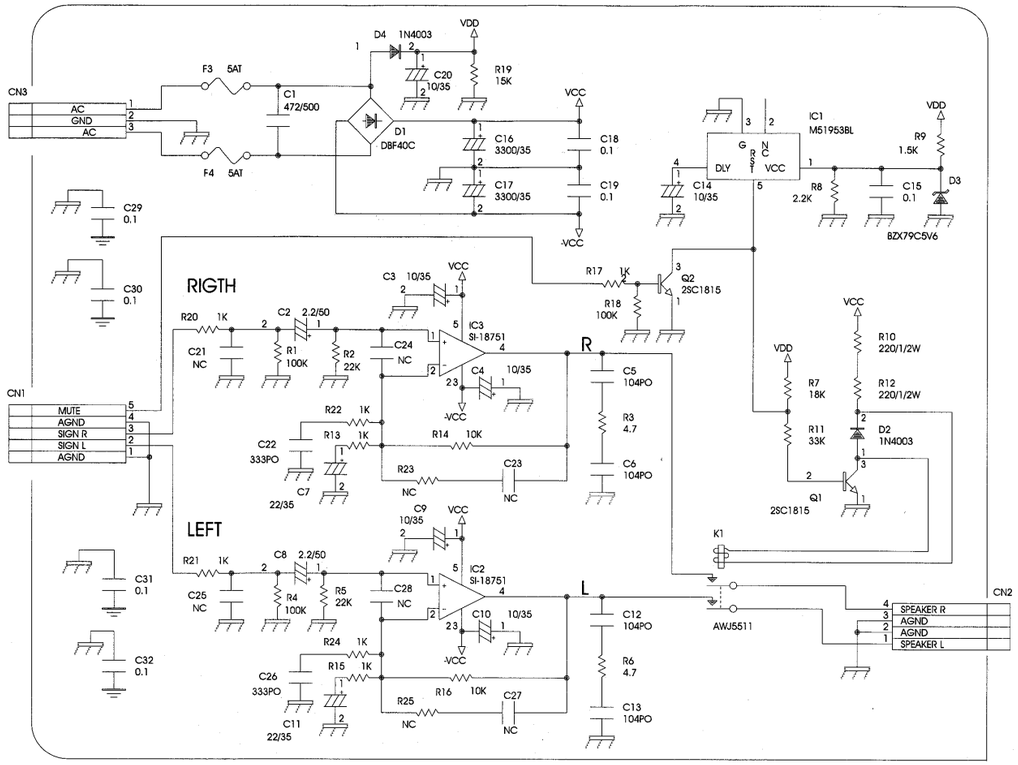

HEADPH. PCB ASSY & CIRCUIT DIAGRAM

ASSY 7696302000

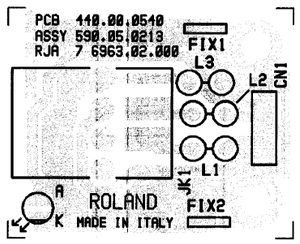

View from component side

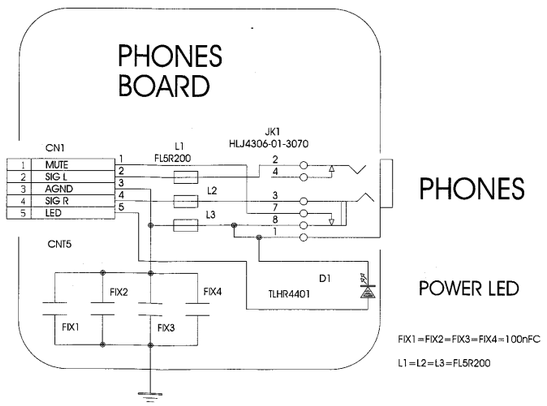

MAINS PCB ASSY & CIRCUIT DIAGRAM

ASSY 7696404000 117V

ASSY 7696403000 230V/240V

View from component side

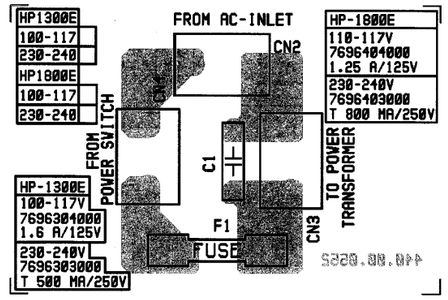

	F1
117V	T 1.25 A UL CSA
230V/240V	T 800mA S UR

SAFETY PRECAUTIONS:
The parts marked safety-related characteristics. Use only listed parts for replacement.
have

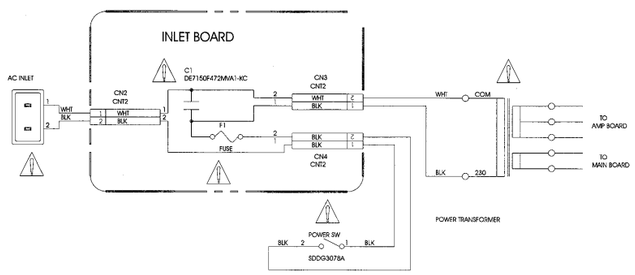

CONTROL PCB ASSY & CIRCUIT DIAGRAM ASSY 7698902000

View from component side

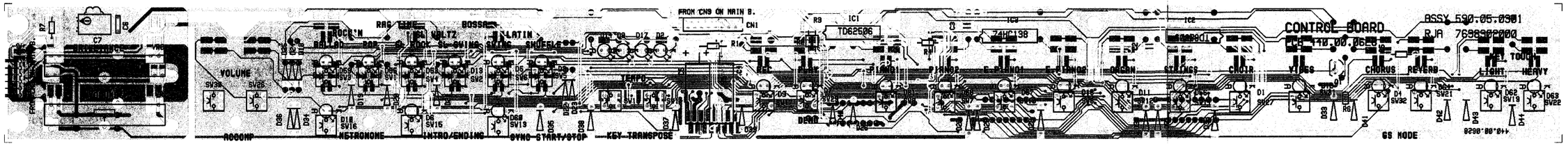

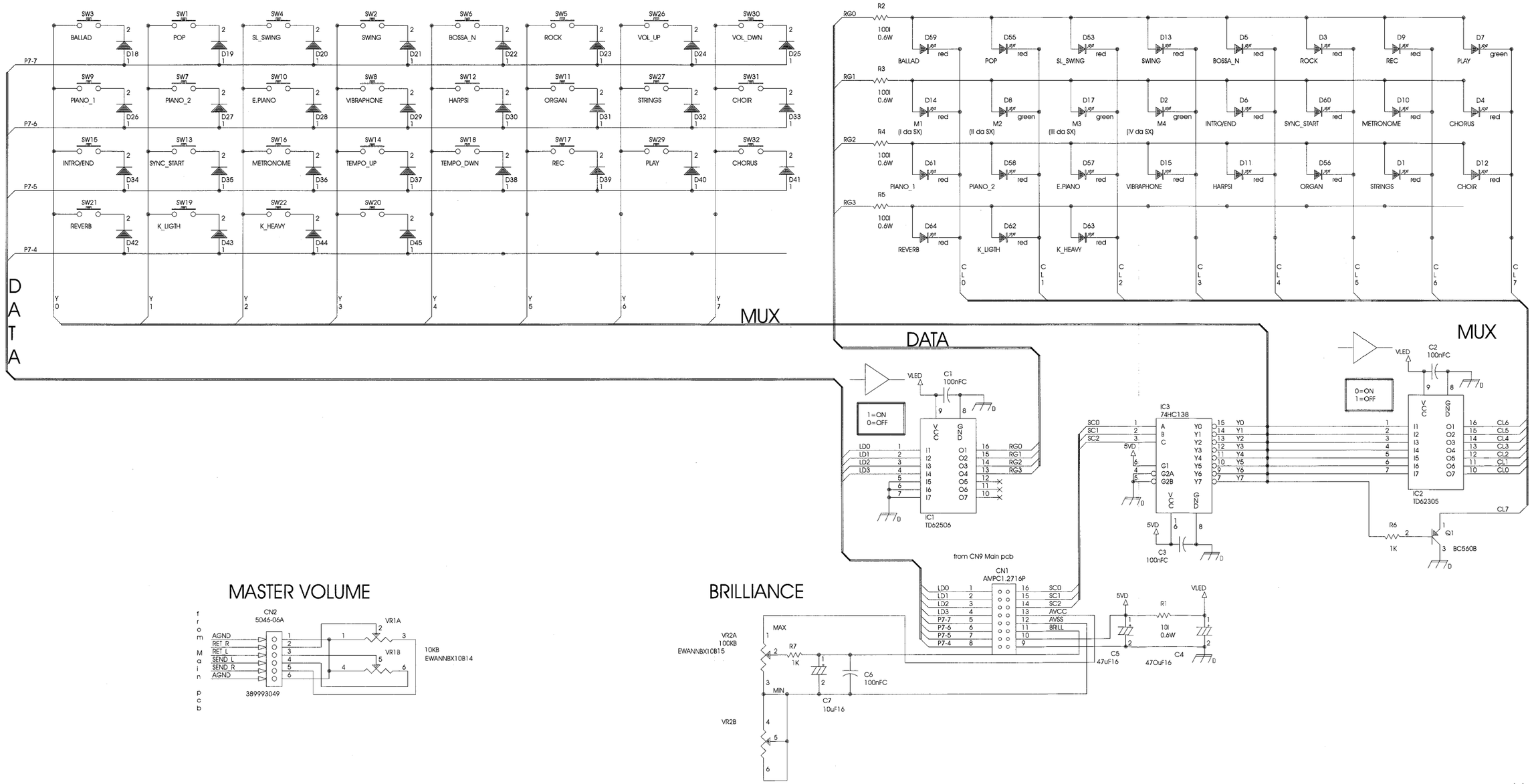

RIGHT CONTACT PCB ASSY w/RUBBER ASSY 7698903000

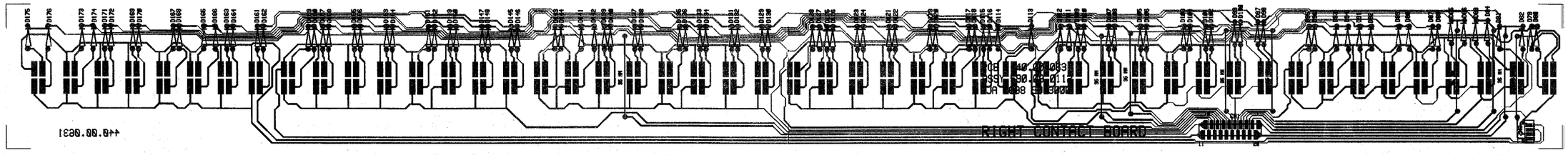

View from component side

LEFT CONTACT PCB ASSY w/RUBBER ASSY 7698904000

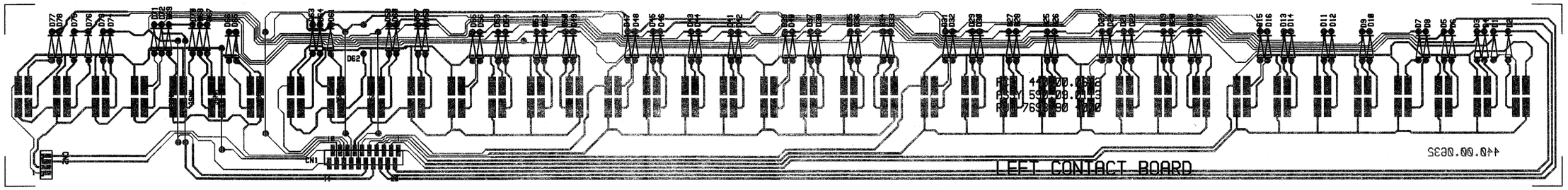

View from component side

CIRCUIT DIAGRAM (RIGHT CONT.PCB ASSY)

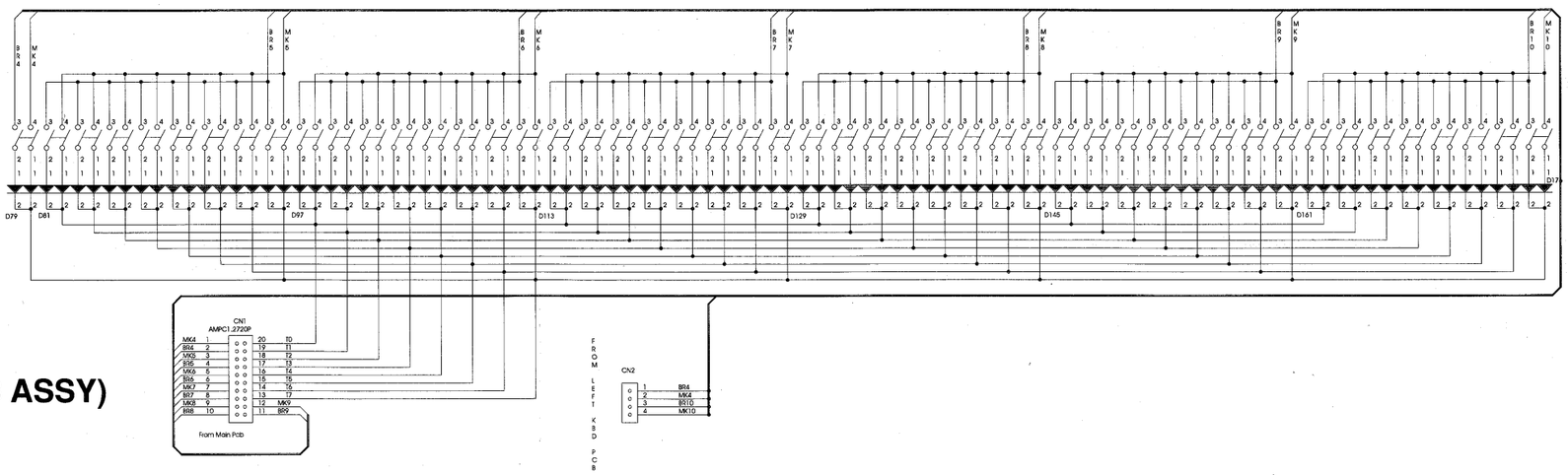

CIRCUIT DIAGRAM (LEFT CONT.PCB ASSY)

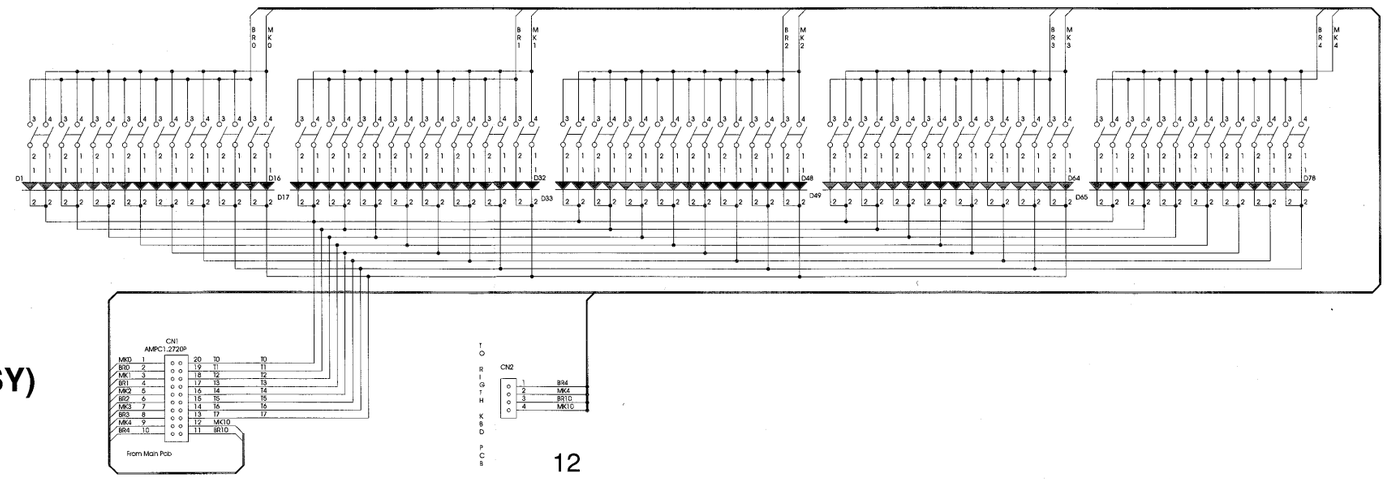

IDENTIFYING THE SOFTWARE VERSION

Press "E Piano 3" while switching ON the instrument.

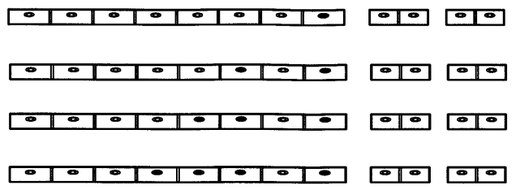

Soft.Ver.=1.00

Soft.Ver.=1.01

Soft.Ver.=1.02

Soft.Ver.=1.03

The software version will be indicated by the tone leds on the control panel as shown above.
To exit, switch the power off.

TEST MODE

Switch the instrument on while holding down the "Piano 1" button.
In the model EP-95/HP-130, the "SI Swing" button led turns on.

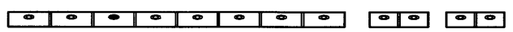

The leds of all the tone buttons blink until one the following possible checks is selected.

The TEST MODE includes 9 tests:

1) Piano1	Test Switch +Led	
2) Piano 2	Test Pedal (or Audio test if pressed while switching on the imstrument).	
3) E.Pia.1	Test Keyboard	
4) Vibr.	Midi	
5) Harp.	Ram	
6) Organ	W Rom	
7) String	Rom Program	
8) Choir	Adc	
9) Effect		Reverb
		Chorus

To exit, press the "Start" and "Choir" buttons simultaneously.

1) Switch and Led test

Press the "Piano1" button and all leds turn on.

When pressing each single button, you can hear a metronome beat while the corresponding button led lights.
When pressing the buttons whithout leds, like TEMPO +/- and VOLUME +/-, the beat leds will turn on from left to right depending on the button you' ve pressed.
Once all leds turn off, after checking all the corresponding buttons, the test is completed.
You cannot exit this test mode before completing this check.

To exit press "Start" + "Choir" buttons simultaneously

2) Pedal test

Press "Piano2", connect the "Soft" and "Damper" pedals to the instrument.

When pressing the "Soft" pedal you'll hear a sound and the first led on the left of the tempo indicator will turn on.
When pressing the "Damper" pedal you'll hear a sound and the last led on the right of the tempo indicator will turn on.

To exit press "Start" + "Choir" buttons simultaneously

3) Keyboard test

Press the "E.Piano" button.

When pressing a key, a sound is generated; the key velocity level is shown by the leds on the control panel, since they turn on in sequence one after another depending on the velocity level, starting from level 1 (= the led on the "Piano" button turns on), up to 127, the highest level (= the "Choir" led turns on)

To exit press "Start" + "Choir" buttons simultaneously

4) Midi test

Press the "Vibraphone" button.

Shortcircuit the Midi IN/OUT sockets on the rear panel by using a MIDI CABLE.
- If the "Play" button led lights, it's OK.
- If the "Rec" button led lights, there's an ERROR.
The error cause, is: either a wrong transmission/reception, or that the MIDI CABLE was not connec ted correctly.

To exit press "Start" + "Choir" buttons simultaneously

5) Ram test (IC2 on Piano Module)

Press the "Harpsichord" button.

- If the "Play" button led lights, it's OK.
- If the "Rec" button led lights, there's an ERROR.
The error cause, is: something wrong either in the RAM (IC2 on Piano Module), or in the circuit.

To exit press "Start" + "Choir" buttons simultaneously

6) Wave Masked Rom test (IC7 on Piano Module)

Press the "Organ" button.

- If the "Play" button led lights, it's OK.
- If the "Rec" button led lights, there's an ERROR.
The error cause, is: something wrong either in the WAVE ROM (IC7 on Piano Module),or in the cir cuit.

To exit press "Start" + "Choir" buttons simultaneously

7) Programmed Masked Rom test (IC6 on Piano Module)

Press the "Strings" button.

- If the "Play" button led lights, it's OK.
- If the "Rec" button led lights, there's an ERROR.
The error cause, is: something wrong either in the PROGRAMMED ROM (IC6 on Piano Module), or in the circuit.

To exit press "Start" + "Choir" buttons simultaneously

8) Adc test

Press the "Choir" button to enter the Adc test mode (Tune/Brilliance/Volume)

MASTER TUNE TEST

The "Piano1" and "Piano2" buttons blink, press "Piano1" and its led will light while the "Piano2" led turns off.
- When closing the "TUNE " potentiometer towards the " b " symbol, a falling sound can be heard;
- when opening the "TUNE " potentiometer toward the " # " symbol, an increasing sound can be heard
Each end position is signalled by a metronome beat.

To exit press "Start" + "Choir" buttons simultaneously. The "Piano1" and "Piano2" buttons Will Blink.

BRILLIANCE TEST (Only for EP-95/HP-130)

Press the "Piano2" button, its led lights while the led of the "Tone2" button turns off.
- When closing the "Brilliance" potentiometer towards "Mellow", a falling sound can be heard.
- When opening the potentiometer towards "Bright", an increasing sound can be heard.
Each and position is signalled by a metronome beat.

To exit press "Start" + "Choir" buttons simultaneously. The "Piano1" and "Piano2" buttons Will Blink.

MASTER VOLUME TEST

When moving this potentiometer from "MAX" to "MIN", the general volume dicreases till no sound can be heard.
When moving the potentiometer from "MIN" to "MAX", the general volume reaches its highest level.

To exit press "Start" + "Choir" buttons simultaneously.

To leave the general Test Mode and go back to the main menu, press "START" and "CHOIR" simultaneously again.

9) Effect test (IC8 on Piano Module)

Press the "Chorus" button, you'll hear a sound with the chorus effect.
Press "Reverb", you'll heard a bassdrum tone and the metronome beats with reverb effect.

To exit press "Start" + "Choir" buttons simultaneously.

Audio test

Switch the instrument on while keeping the "Piano2" button pressed.
You'll hear a hight frequency sound from the left speaker and a low frequency sound from the right speaker.
To exit, switch the instrument off.

Factory Setup

After finishing the checks, switch the instrument on while keeping the "REC" button pressed.

Both the "REC" and "PLAY" leds blink for a few seconds, this confirms the program has been reset.